ANBİ
www.anbisolutions.com

METAR

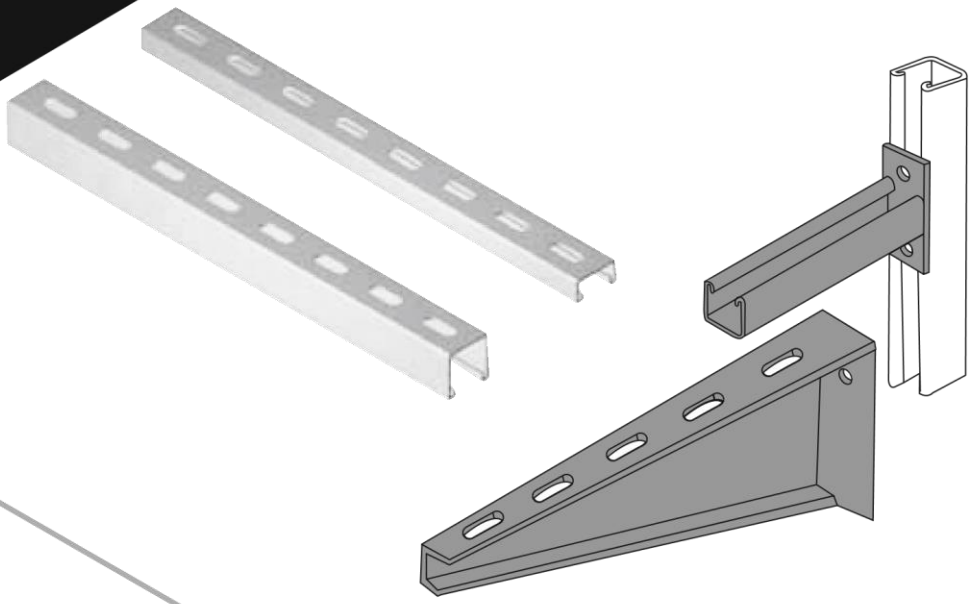

METAR CABLE MANAGEMENT SYSTEMS

UNISTRUT METAL FRAMING SYSTEMS TECHNICAL DATA

APPROVED QUALITY SCHEME QEC ISO 9001:2008 REGISTERED COMPANY

UKAS QUALITY MANAGEMENT 077

SYSTEM CERTIFICATION ISO 9001 SGS

SYSTEM CERTIFICATION ISO 14001 SGS

SYSTEM CERTIFICATION OHSAS 18001 SGS

CONTENTS

PREFACE	01
MATERIAL AND FINISHES	02
DESIGN CONSIDERATIONS	05
INTRODUCTION	08
STRUT CHANNELS	09
FLAT PLATE FITTINGS	11
ANGLE FITTINGS	13
WING FITTINGS	14
Z & U FITTINGS	15
BEAM CLAMPS	16
CHANNEL CONNECTORS	17
BASE POSTS	18
CANTILEVERS	20
I-BEAM SUPPORT	22
FASTENERS	24
PROPERTIES OF SECTION PROFILES	25

PREFACE

METAR offers a comprehensive range of components forming the elements of a complete cable management system. The system offered comprises:

Cable trays and cable ladders (conforming to BS EN 61537)

Metal channel cable supports (conforming to BS 6946)

Steel surface trunking (conforming to BS 4678 : Part 1)

When using this catalogue great care must be taken to establish all factors, which effect the environment in which the cable management system is being used. Where loading performance □gures are stated, they are given in good faith based on average □gures obtained by extensive testing of METAR components. They are provided to assist in the system design process procedure adopted by customers but are given without accepting liability that components delivered may vary in performance. When a cable management system comprises of several different components, it will be necessary to check the system loading on all components. System designers should not extrapolate any results beyond the published data and if in doubt about the application of the product data, they should contact METAR technical department.

CABLE MANAGEMENT SYSTEMS ARE NOT DESIGNED FOR USE AS WALKWAYS OR TO SUPPORT INSTALLATION OR MAINTENANCE PERSONNEL.

MATERIALS AND FINISHES

METAR offers its range of cable management products in a variety of materials and fnishes to suit the environmental conditions where components will be installed. Choice of an appropriate material / finish is always an important consideration in system design because maintenance of components once installed will be extremely difficult. Clients will undoubtedly expect a long life for the installed system and the choice of appropriate material / finish must consider the expected prevailing atmosphere and its effect on the system components.

Mild steel is an economical material for load bearing structures but if the surface remains untreated, it would rapidly begin to show signs of corrosion even in only mildly aggressive environments. When mild steel corrodes, the iron content is converted to oxides (rust), this progressively changes the strong steel into weak oxides which rapidly reduces the load bearing capacity of the affected part. If mild steel is coated with zinc, not only is the steel protected by the envelope of zinc whose chemical corrosion rate is low but since zinc is higher in the electro-chemical series, the zinc will always pass into solution before the iron content of steel. The strength of the steel structure will not be weakened by corrosion until the zinc coating has been sacri□ced. The length of time it takes for the zinc coating to dissolve is in proportion to the thickness of the coating and the aggressiveness of the environment in which it is exposed.

Pre-Galvanised steel (PG) Mill Galvanised Steel.

Whilst the mild steel is still in wide coil form at the steel mill, it is processed in a continuous operation to clean the steel and pass it through a bath of molten zinc which forms iron / zinc alloys and a coating of pure zinc on the surfaces of the steel which is then cooled and re-coiled. This means that the steel is galvanised before it is slit to width, cut to length, pierced and formed to shape. The coating cannot be allowed to become thick because it would split during the forming process. However, since zinc offers electro-chemical protection, it will offer protection for what might be considered unprotected edges where the flat material has been cut or pierced. This is an effective and economic anti corrosion finish suitable for interior applications except where there is continual high humidity and / or corrosive atmosphere.

MATERIALS AND FINISHES

Hot Dip Galvanised Steel (HDG)

To achieve this finish, components made from mild steel are cleaned and dipped into a bath of molten zinc after all the other manufacturing process have been completed. Not only does this ensure that the whole of the component is coated, it offers the opportunity to develop a much thicker zinc coating than is possible with pre-galvanising. METAR takes particular care to ensure that a coating to British standards is achieved and that the distortion of components is minimised. However, this is a hot working process and some distortion and surface roughness may be in evidence. Since the zinc thickness is triple that of pre-galvanised steel, the anti-corrosive properties are enhanced. This finish will be suitable for most exterior installations except where there is a very aggressive atmosphere.

Stainless Steel (SS)

Stainless steel differs from mild steel. It contains a variety of alloyed elements, which very significantly reduce the rate at which the iron content will oxidise. The name "stainless" is a misnomer because many pollutants and chemicals will mark or stain the surface but this does not erode the strength of the steel as rusting weakens mild steel. To obtain good forming and outstanding corrosion resistance properties austenitic grades of stainless steel are used. They also have the property that they will withstand aggressive chemicals, used to wash down the processing areas where good hygiene is a high priority. The fact that stainless steel can maintain strength properties even when exposed to high temperature is also a valuable asset. This portfolio of useful properties makes stainless steel suitable for systems exposed to very aggressive atmospheres, including marine environments, high levels of pollution, caustic soda and temperatures of 1000deg C for periods long enough to give some integrity to electrical circuits in a fire emergency.

Epoxy Powder Coatings (PC)

These coatings are applied to mild steel components. The coatings can be offered in a wide variety of colours to meet the architectural project requirements. The coatings themselves are resilient to damage and will withstand atmospheric pollution and ultra-violet exposure from sunlight. However, if the coating envelope is broken the steel substrate will have little defence to corrosive agents. A highly decorative appearance can be achieved but longevity of this finish cannot be guaranteed.

Other Materials and Finishes.

Apart from the standard materials and finishes listed METAR can offer other materials and finishes, which are required for a specific project specification. Please contact our technical department to discuss fully any such situation and the effect that this may have on other data associated with components shown in our catalogue range.

MATERIALS AND FINISHES

METAR Industries produces the components of its cable management system from materials to the following internationally recognised standards.

Pre Galvanised

To BS EN 10327, the substrate is mild steel Grade DX51D with yield >200 N/mm2. The zinc coating is applied before metal forming and the grade used Z275 implies a coating thickness of 20 microns.

Hot Dip Galvanized

>1.5mm thick steel Grade D11 to BS EN 10111 yield >200 N/mm2 or <1.5mm thick steel to Grade DC01 to BS EN 10130 yield >200N/mm2 is used to manufacture components, which are galvanized to the requirements of BS EN ISO 1461 generating a coating thickness of at least 65 microns

Stainless Steel

Austenitic stainless steel to BS EN 10088 Grade 1-4401 is used which has 17% Chromium 12% Nickel & 2% Molybdenum analysis.

Powder Coated

thick steel Grade D11 to BS EN 10111 yield >200 N/mm2 or <1.5mm thick steel to Grade DC01 to BS EN 10130 yield >200N/mm2 is used to manufacture components, which are coated with an epoxy powder. This will be in an agreed colour, offering a cosmetic finish with only limited anti-corrosive properties.

It is possible for METAR to manufacture components of the product range in alternative materials to those listed above. For further information on these possibilities please contact our Technical Department.

WARNING

- Cutting components on site may well impair their resistance to corrosion.
- Welding coated products may generate toxic fumes.
- Products must be stored in dry and well-ventilated conditions prior to installation.

DESIGN CONSIDERATIONS

DESIGN CONSIDERATIONS

CABLE TRAY & LADDER SYSTEMS

METAR offers a comprehensive range of cable tray and ladder products conforming to BS EN 61537. To design a safe and economical system, it is necessary to consider all the loads applied to the system and establish the criteria by which it will be judge.

LOADS APPLIED TO THE SYSTEM

The weight of cables to be fixed on the system will provide the basic loading data. However, it is always advisable to consider that future system requirements can be expected and allow 20% for additions at a later date. The following should also be considered:

1. The capacity charts provided in this catalogue assume that loading is uniform, both along length and across width. If a point load is applied to the tray / ladder it will potentially have a significant effect and this must be quantified.
2. If components are incorporated in an exterior installation there may be other loading factors to consider, such as wind, ice and snow .

SAFE LOADING AND DEFLECTIONS

Cable tray & ladder acts as a structural load carrying beam when installed horizontally. The loads imposed and the type and location of supports will create a pattern of bending moment in the structure. Stress will be induced and deflections (vertical displacements) will be observed. A properly specified system will ensure that the stress does not exceed to that which is safe for the materials used in the components. BS EN 61537 specifies that published safe working loads can be increased by 1.7 times without system collapse.

A suitable installation will require choice of appropriate style of tray / ladder and the location of supports. Increasing the span (horizontal distance between supports) will always reduce safe load carrying capacity and increase deflection.

DESIGN CONSIDERATIONS

LOCATION OF SUPPORTS AND CONNECTIONS

Normally cable tray / ladder is connected together forming a continuous beam over several supports. A typical bending moment diagram shown on the previous page shows the following:

1. Bending moment is much larger in the end spans of the continuous beam than the intermediate spans; which will reduce the load carrying capacity in the end spans. If an installation requires full load carrying capacity along the whole length, than full capacity of the intermediate spans can be used if the end spansare reduced to 0.75L (length of intermediate spans).

2. Bending moment is zero at approximately 0.25L either side of the intermediate supports. These are therefore ideal places to locate connections between component lengths of cable tray/ladder. The installer should avoid placing connections in mid-span positions and at supports. These are positions of maximum bending moment.

3. The diagram shows a typical multi-span beam loading condition. If a loading condition occurs where there is only a single span loading condition it can be taken that the permissible load is reduced to 0.5 that shown for intermediate span in multi-span beams.

4. Only straight length beams are discussed above. When accessories (bends, tees, risers etc.) are involved in an installation they will require extra local support. It is always recommended to use fish plates in conjunction with connectors, particularly when cable trays of greater than 200mm are used. Where earth continuity is an important consideration in a cable tray or ladder system, bonding jumper leads should be used. Cable ladders runs exposed to wide ambient temperature & the variation should incorporate expansion connectors. The chart below illustrates suitable gap setting.

FOR STRAIGHT LENGTHS AND ACCESSORIES

Range / Width (W)	Thickness (T)	Side Height (H)
All dimensions are in mm		
50 to 150	1.0	15
225 to 300	1.2	15
450 to 600	1.5	20
750 to 900	2.0	20

STANDARD FINISHES

HDG	Hot dip Galvanized to BS EN ISO 1461:1999 (Formerly BS 729)
PG	Pre-galvanized to BS EN 10142 & 10143
PC	Powder Coating to suit clients requirements
SS	Stainless steel finish to required grades

Light duty straight flange cable trays are made in a standard length of 3 mtrs but can be produced in different lengths on request

Light duty straight flange cable tray accessories are made to standard radius of 300 mm but can be produced in 450 mm, 600mm and 900 mm as required

ORDER PATTERN

To select the required component, please specify the type, component, width, finish. Angles can be mentioned wherever necessary.

TYPE / COMPONENT / WIDTH / FINISH (without angle) LDT / COM / WIDTH / HDG
TYPE / COMPONENT / WIDTH / ANGLE / FINISH (with angle) LDT / COM / WIDTH / A / HDG **EXA**

Covers for LDT are not shown in the manual but can be produced on request

Note: *For special finishes consult our sales team, factory*
For special sizes, gauges, flanges, consult our sales team, factory

INTRODUCTION

METAR offers a comprehensive metal framing system that conforms to BS 6946:1988 (Metal channel cable support systems for electrical installations).

The METAR system incorporates the following features
Flexibility of elements of the system can be combined to create an unlimited range of structural designs.

- Rigidity of easily assembled rigid structures can be created without the need for drilling and welding.
- Adjustability of position of components can be easily adjusted & structures can be demounted and components reused.
- Competitiveness & high strength to weight components and ease of assembly make this a cost effective solution to support structural requirements.
- It has many applications for structural support of mechanical as well as electrical services in a wide range of industries and construction projects.

The standard material nish for strut channel and brackets is HDG Hot Dip Galvanised. The mild steel used has a yield of at least 250 N/mm2

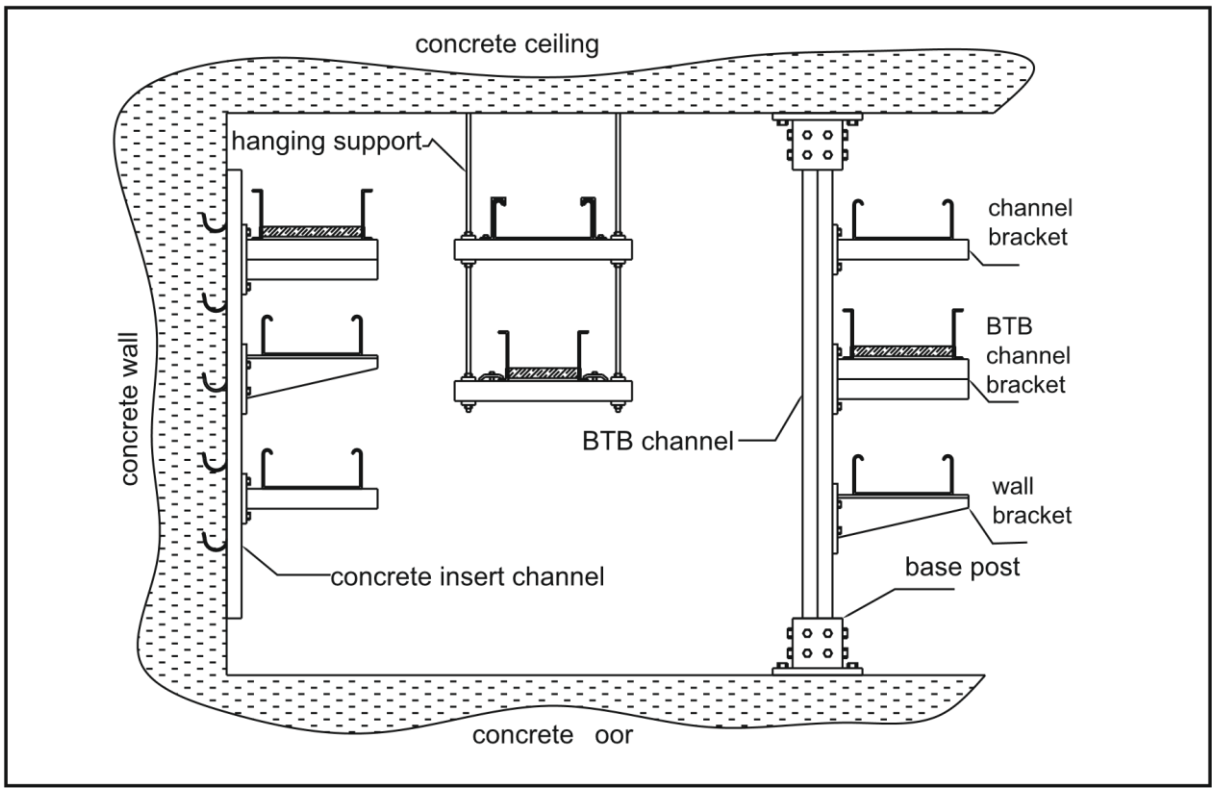

41x21 3M ᵓ a	41x21-3M Plain channel	ᵓC/42/ n sh	2 5
41x41 3M ᵓ a	41x41-3M Plain channel	ᵓC/44/ n sh	2 5
41x21 3M S ot	41x21-3M Slotted channel	SC/42/ n sh	2 5
41x41 3M S ot	41x41-3M Slotted channel	SC/44/ n sh	2 5
41x21 3M Bac	41x21-3M Back to Back channel	BTB/42/ n sh	2 5
41x41 3M Bac	41x41-3M Back to Back channel	BTB/44/ n sh	2 5
41x21 3M Con	41x21-3M Concrete Inserts	C /42/ n sh	2 5
41x41 3M Con	41x41-3M Concrete Inserts	C /44/ n sh	2 5
41x21 Channe	41x21-Channel End Caps	C C/42	
41x41 Channe	41x41-Channel End Caps	C C/44	

CEC/42
CEC/44

Slotted channel - 41x41

Slotted channel - 41x21

Back to Back channel - 41x21

Concrete Inserts - 41x41

Concrete Inserts - 41x21

Back to Back channel - 41x41

Plain channel - 41x41

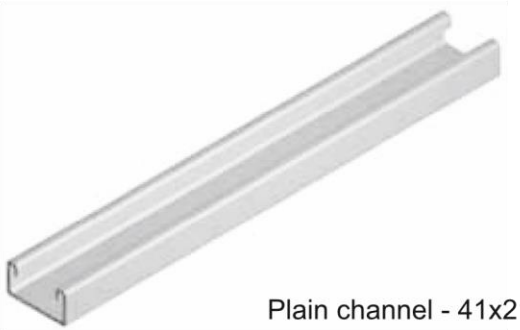

Plain channel - 41x21

Note: All strut channels are in a standard length of 3 mts

Strut Channels

Strut Channels

PLAIN CHANNEL 41 X 41

PC 44 (plain channel 41x 41)

Material thickness = 2.5 mm

Weight = 2.64 Kgs/m

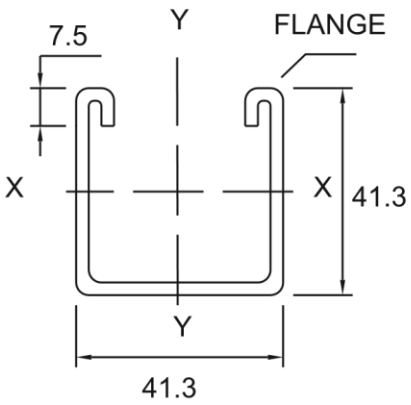

PLAIN CHANNEL 41 X 21

PC 42 (plain channel 41 x 21)

Material thickness = 2.5 mm

Weight = 1.84 Kgs/m

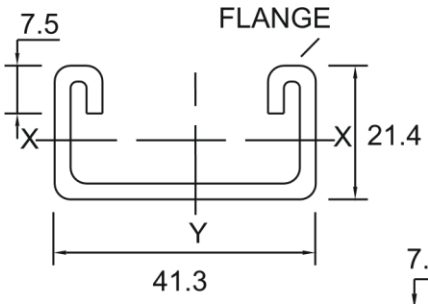

BACK TO BACK CHANNEL 41 X 41

BTB 44 (back to back channel 41 x 41)

Material thickness = 2.5 mm

Weight = 5.28 Kgs/m

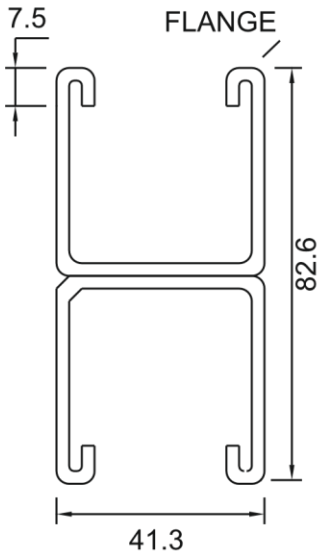

BACK TO BACK CHANNEL 41 X 21

BTB 42 (back to back channel 41 x 21)

Material thickness = 2.5 mm

Weight = 3.68 Kgs/m

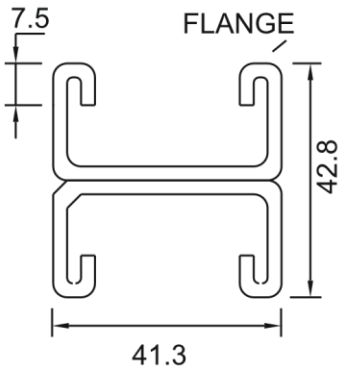

SLOT PATTERNS

Strut channels are produced with slots also with a standard length of 3 mtrs. Extra long up to 6 mtrs. can also be produced on request.

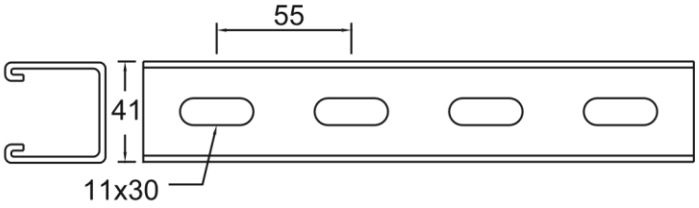

Flat Plate Fittings

METAR 701 **Square Washer**

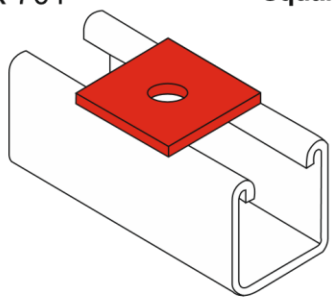

Thickness = 6 mm

METAR 702 **Locking Square Washer**

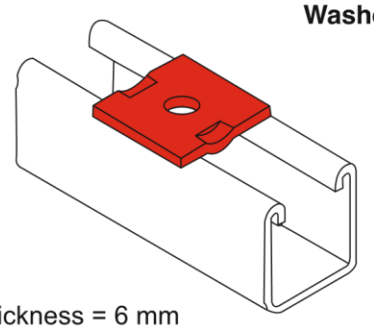

Thickness = 6 mm

METAR 703 **Double Hole Splice Plate**

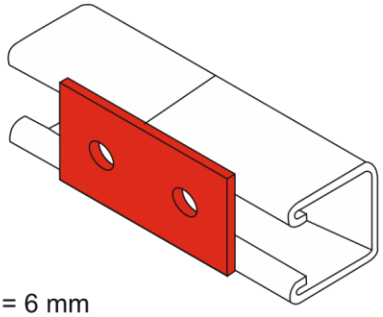

Thickness = 6 mm

MEART 704 **Triple Hole Splice Plate**

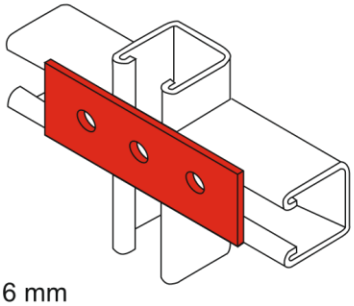

Thickness = 6 mm

METAR 705 **4 Hole Splice Plate**

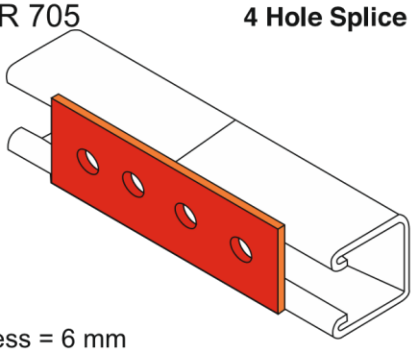

Thickness = 6 mm

METAR 706 **3 Hole Swivel Plate**

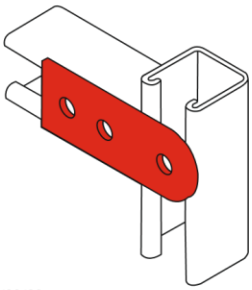

Thickness = 6 mm

METAR 707 **3 Hole Corner Plate**

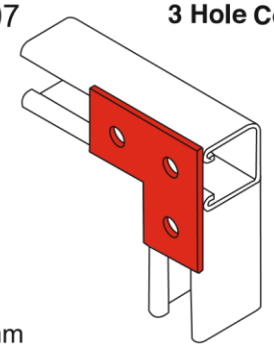

Thickness = 6 mm

Flat Plate Fittings

METAR 708 **4 Hole Tee Plate**

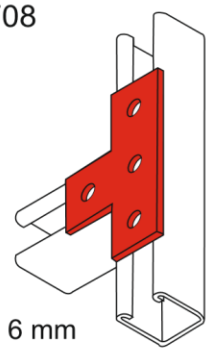

Thickness = 6 mm

METAR 709 **5 Hole Cross Plate**

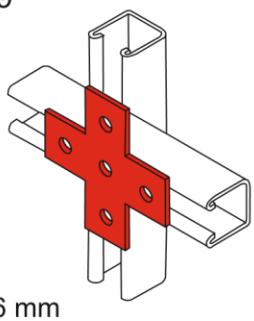

Thickness = 6 mm

METAR 710 **3 Hole Corner Gusset Plate**

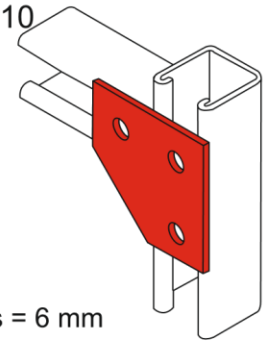

Thickness = 6 mm

METAR 711 **4 Hole Corner Gusset Plate**

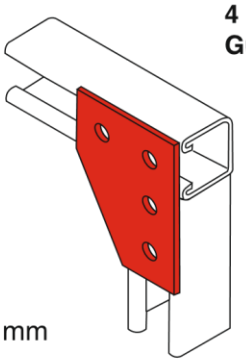

Thickness = 6 mm

METAR 712 **5 Hole Corner Gusset Plate**

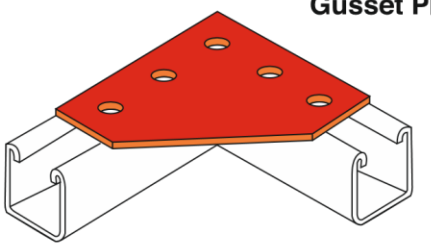

Thickness = 6 mm

METAR 713 **4 Hole Center Gusset Plate**

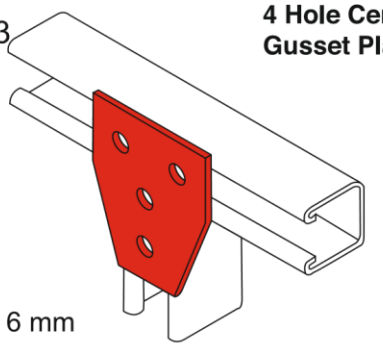

Thickness = 6 mm

METAR 714 **5 Hole Tee Gusset Plate**

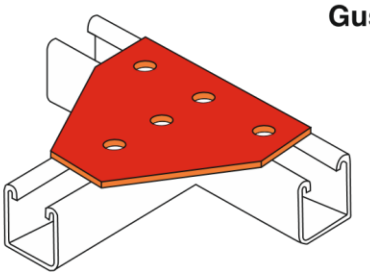

Thickness = 6 mm

t

Angle Fittings

METAR 102 **Corner Angle 2 Hole**

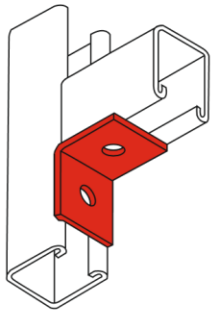

Thickness = 6 mm

METAR 104 **Corner Angle 4 Hole**

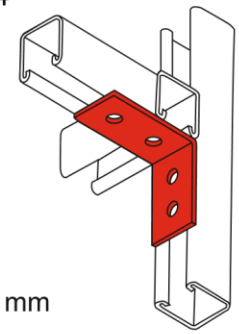

Thickness = 6 mm

METAR 106 **Tee Angle**

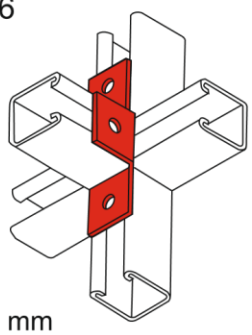

Thickness = 6 mm

METAR 108 **5 Hole Gusset Angle Bracket**

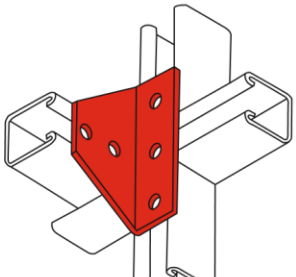

Thickness = 6 mm

t

METAR 103 **Corner Angle 3 Hole**

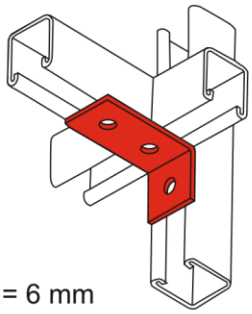

Thickness = 6 mm

METAR 105 **Universal Bracket**

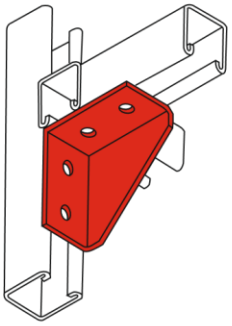

Thickness = 6 mm

METAR 107 **4 Hole Gusset Shelf angle**

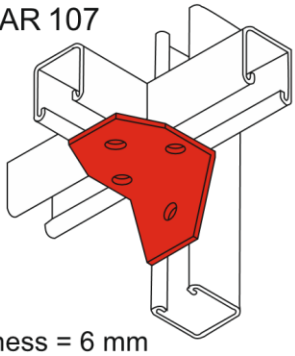

Thickness = 6 mm

METAR 109 **6 Hole Gusset Shelf angle**

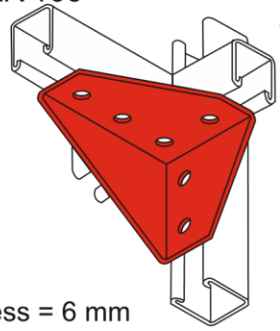

Thickness = 6 mm

t

Wing Fit ings

t

METAR 201 3 Hole Right Corner Connection

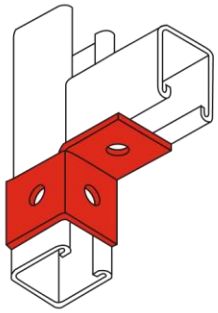

Thickness = 6 mm

METAR 202 3 Hole Left Corner Connection

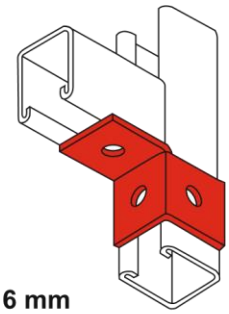

Thickness = 6 mm

METAR 203 4 Hole Double Corner Connection

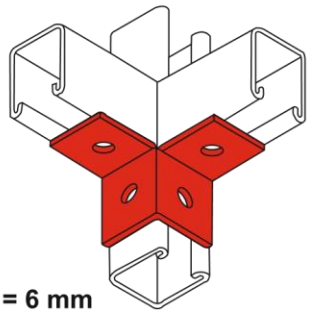

Thickness = 6 mm

METAR 204 6 Hole Double Corner Connection

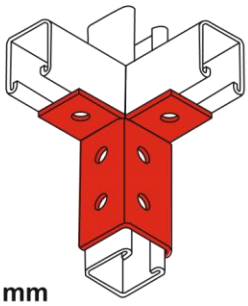

Thickness = 6 mm

METAR 205 8 Hole Triple Wing Connection

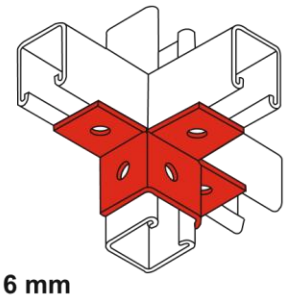

Thickness = 6 mm

METAR 206 8 Hole - Wing Connection

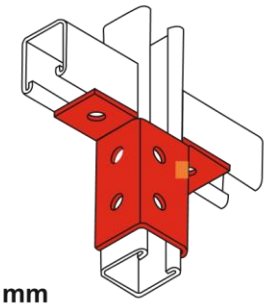

Thickness = 6 mm

CHANNEL NUTS

DESCRIPTION	6mm	8mm	10mm	12mm
Channel Nut Without Spring	METAR/ 6 CNWS	METAR/ 8 CNWS	METAR/ 10 CNWS	METAR/ 12 CNWS
Channel Nut With Short Spring	METAR/ 6 CNWS	METAR/ 8 CNWS	METAR/ 10 CNWS	METAR/ 12 CNWS
Channel Nut With Long Spring	METAR/ 6 CNWS	METAR/ 8 CNWS	METAR/ 10 CNWS	METAR/ 12 CNWS

t

Z & U Fittings

METAR 301 **U-Clamp - PC 42**

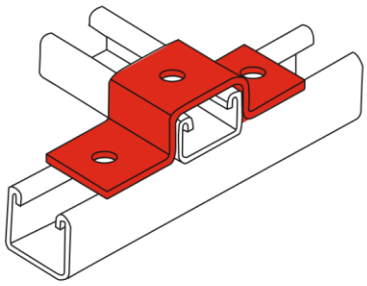

Thickness = 6 mm

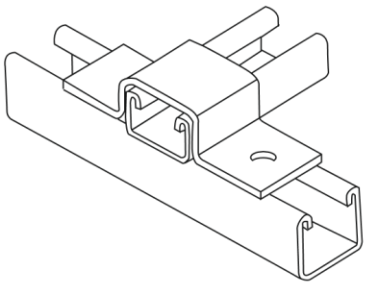

METAR 303 **5 Hole U Support**

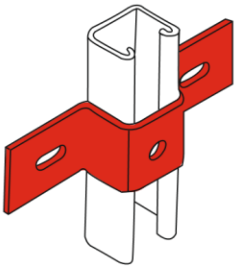

Thickness = 6 mm

METAR 305 **5 Hole U Support**

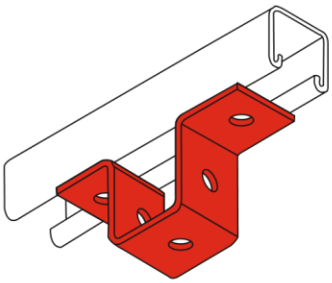

Thickness = 6 mm

METAR 307 **Z Support**

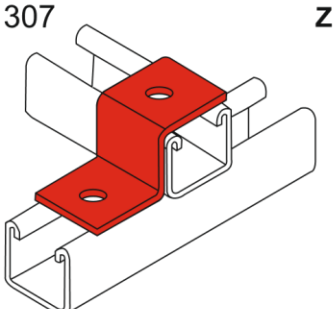

t

METAR 302

U-Clamp - PC 44

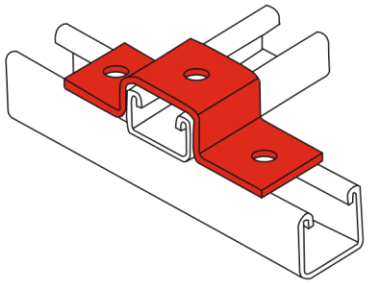

Thickness = 6 mm

METAR 304

U-Clamp - BTB 44

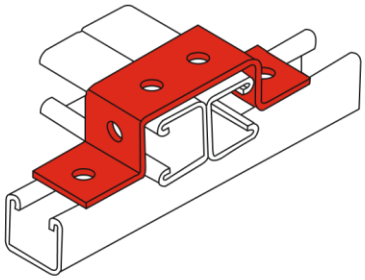

Thickness = 6 mm

METAR 306

Z Support

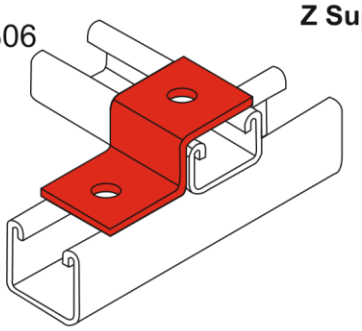

Thickness = 6 mm

METAR 308

Z Support

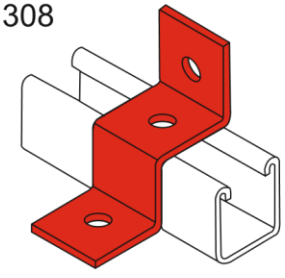

Thickness = 6 mm

Beam Clamps

METAR 401 **Beam Clamp Z Type**

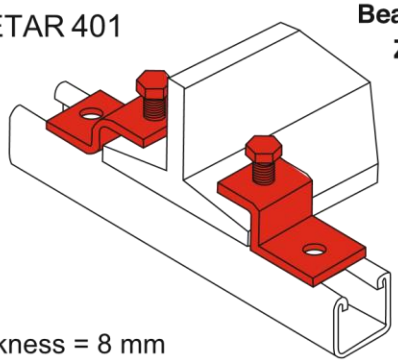

Thickness = 8 mm

METAR 402 **Beam Clamp**

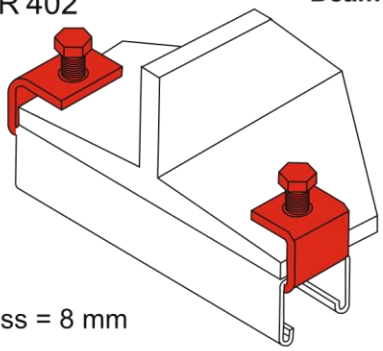

Thickness = 8 mm

METAR 403 **Beam Clamp**

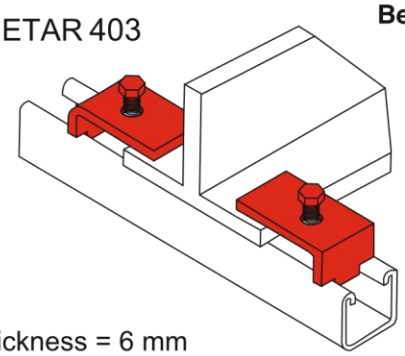

Thickness = 6 mm

METAR 404 **Window Beam Clamp**

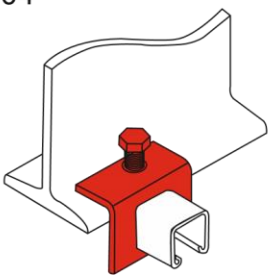

Thickness = 6 mm

METAR 405

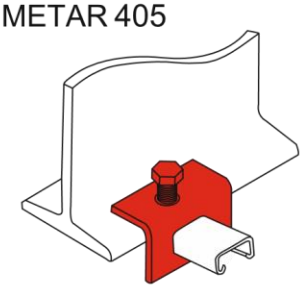

Thickness = 6 mm

METAR 406 **Beam Clamp**

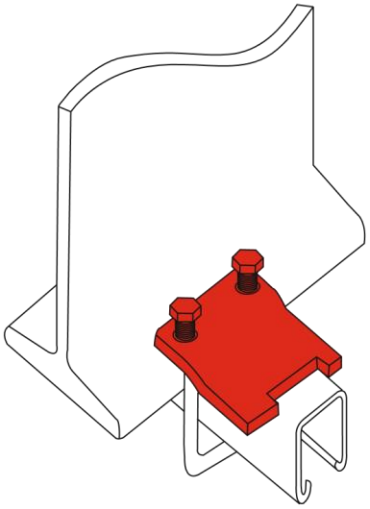

Thickness = 6 mm

METAR 407 **Beam Clamp**

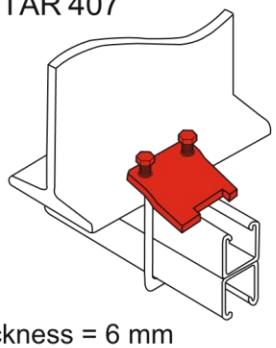

Thickness = 6 mm

METAR 408 **Beam Clamp**

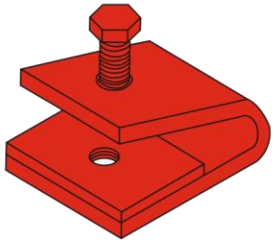

Thickness = 6 mm

METAR 409 **Beam Clamp C Type**

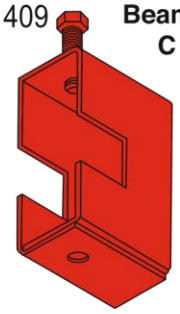

Thickness = 2 mm

a

Thickne s = m

Channel Connectors

METAR

	METAR 502 **U Connector PC44** 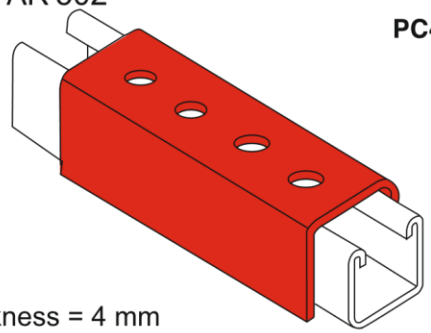 Thickness = 4 mm
	METAR 504 **Two Hole Open Angle** 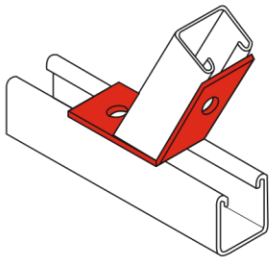 Thickness = 6 mm
	METAR 506 **Strut Connector 90°** 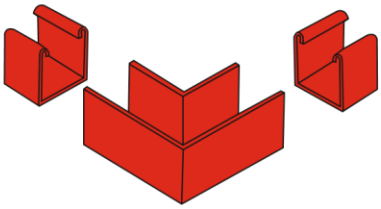 Thickness = 2.5 mm
Thickne s = m	METAR 508 **Strut Connector Cross** 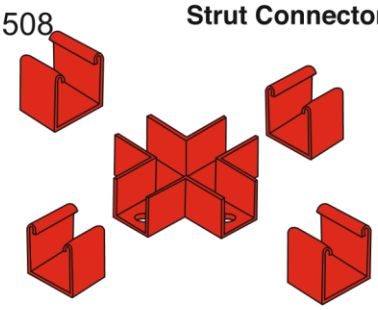 Thickness = 2.5 mm

a

B se Posts

Thickne s = m

METAR

METAR 801

3 Hole
Base Post PC 44

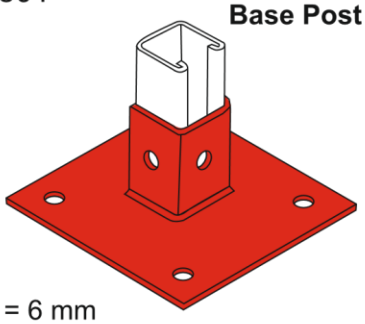

Thickness = 6 mm

METAR 803

6 Hole
Base Post PC 44

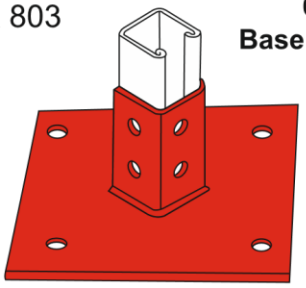

Thickness = 6 mm

METAR 805

6 Hole
Base Post PC 44

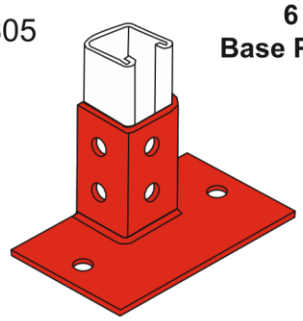

Thickness = 6 mm

METAR 807

6 Hole
Double Channel
Base Post

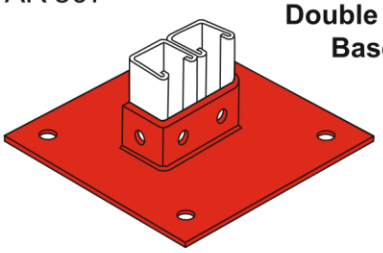

Thickne s = m
Thickness = 6 mm

a

Thickne s = m

METAR 802

3 Hole
Base Post PC 42

a

Base Posts

METAR 809

BTB High Base Post

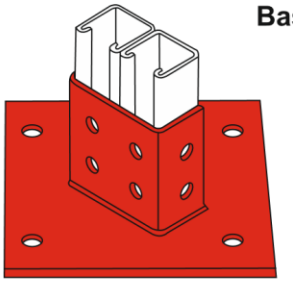

Thickness = 6 mm

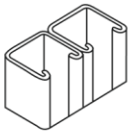

METARI 811

Base Post High PC-44 Double Channel

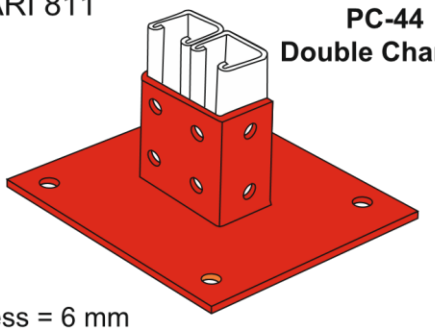

Thickness = 6 mm

METAR 813

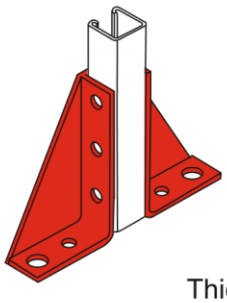

Thickness = 6 mm

CHANNEL HANGERS

METAR 601

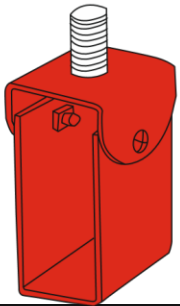

a

METAR 810 **Double Channel High Post Base**

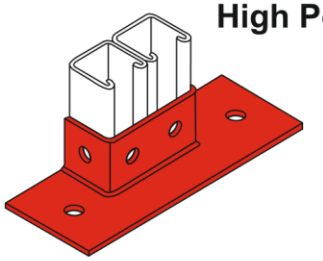

Thickness = 6 mm

METAR 812 **Base Post PC-44**

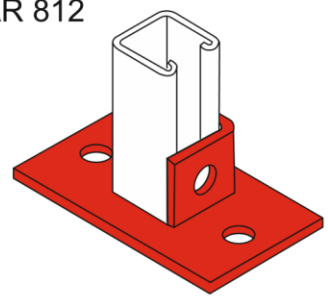

Thickness = 6 mm

METAR 814 **BTB Gusset Base Post**

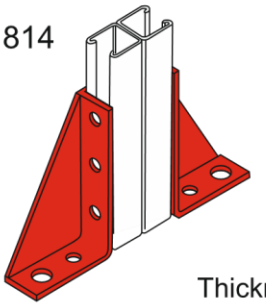

Thickness = 6 mm

FLOOR BRACKET

METAR 602

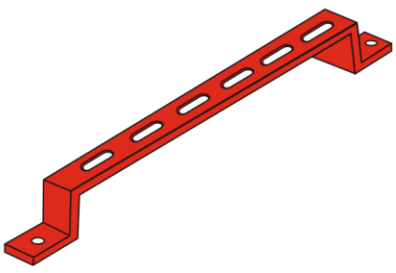

Thickness = 2.0 mm

a

D (F ON	S	PAF F
Cantilever Arm	75	TYPE - C
Cantilever Arm	100	TYPE - C
Cantilever Arm	150	TYPE - C
Cantilever Arm	225	TYPE - C
Cantilever Arm	300	TYPE - C
Cantilever Arm	450	TYPE - C
Cantilever Arm	600	TYPE - C
Cantilever Arm	750	TYPE - C
Cantilever Arm	900	TYPE - C
Cantilever Arm	1000	TYPE - CA

C ntilevers

To order cantilever arms for your designed installation, specify the type of the cantilever you require. Types are given in the table adjacent and shown.

a

DESCRIPTION	TYPE
Cantilever Arm	MET - 1
Cantilever Arm	MET - 2
Cantilever Arm	MET - 3
Cantilever Arm	MET - 4
Cantilever Arm	MET - 5
Cantilever Arm	MET - 6
Cantilever Arm	MET - 7
Cantilever Arm	MET - 8
Cantilever Arm	MET - 9
Cantilever Arm	MET - 10

END CAP 41 X 21

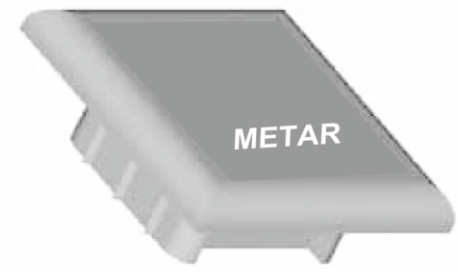

END CAP 41 X 41

ES ?T ZE ?T ?EF

a

STANDARD FINISHES

HDG Hot dip Galvanized to BS EN ISO 1461:1999 (Formerly BS 729)
PG Pre-galvanized to BS EN 10142 & 10143
PC Powder Coating to suit clients requirements

a

METAR -1

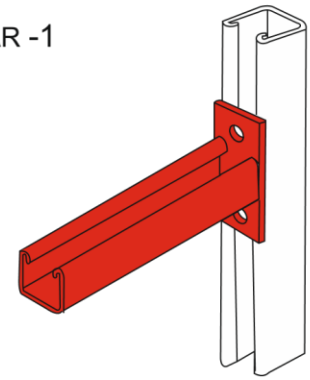

METAR-2

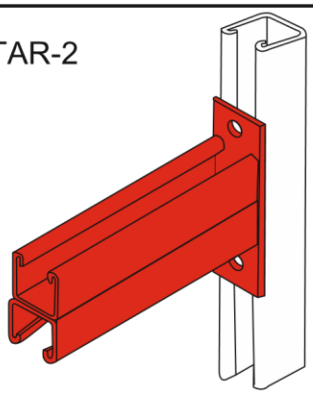

METAR -3

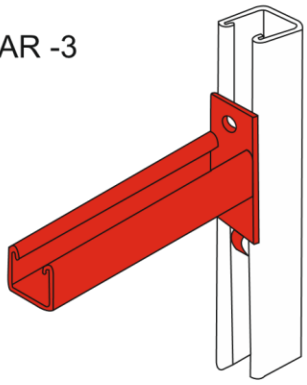

METAR -4

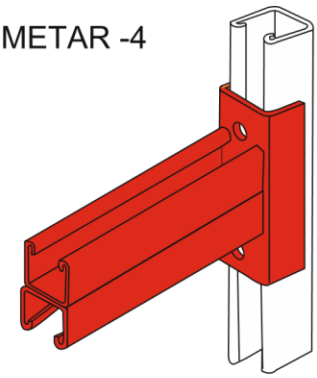

METAR -5

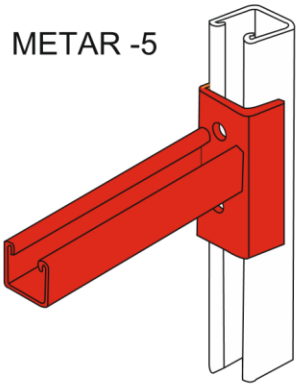

METAR -6

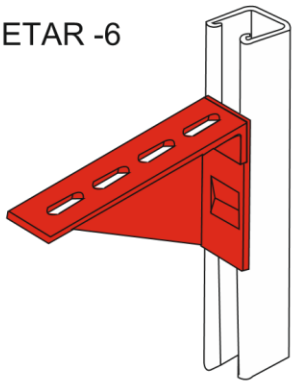

METAR -7

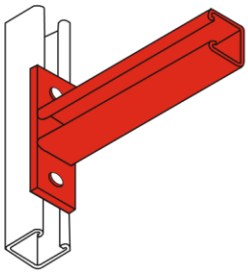

METAR -8

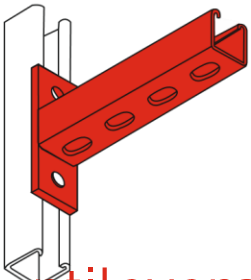

METAR -9

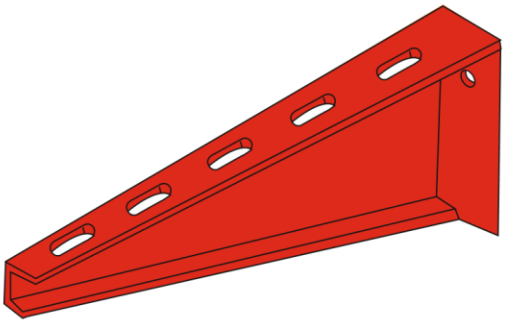

C ntilevers

I-Beam Supports

METAR 901 **I - Support**

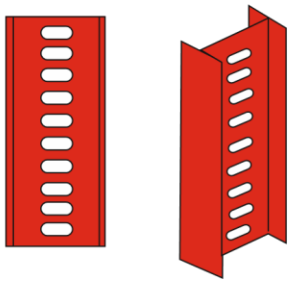

METAR 903 **Top Head I-Support**

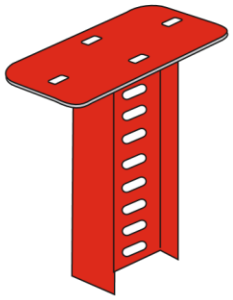

METAR 905 **Top Head T-Support**

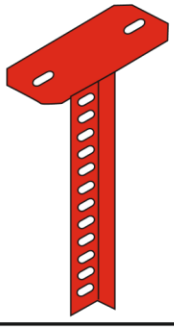

METAR 907 **Top Head Plate**

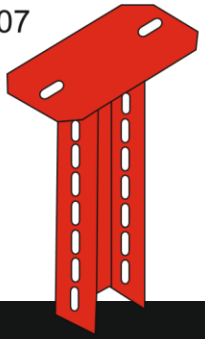

METAR 902

I-Support Connector

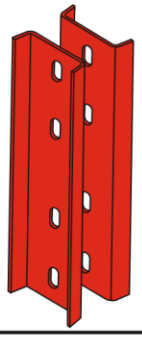

METAR 904

Base-Head Plate

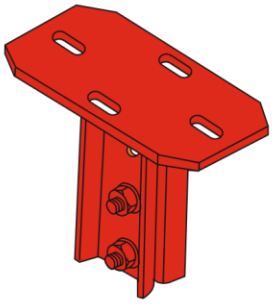

METAR 906

Base Head Plate

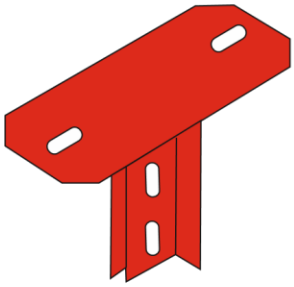

METAR 908

Base Head Plate

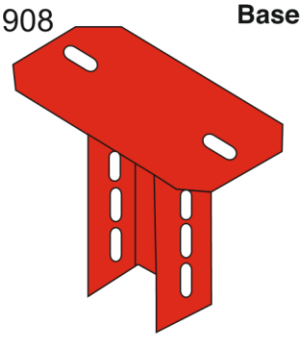

I-Beam Supports

METAR 909 **U Support**

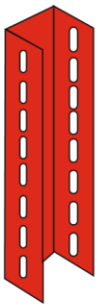

METAR 910 **T - Support Bracket**

METAR 911 **I - Support Bracket**

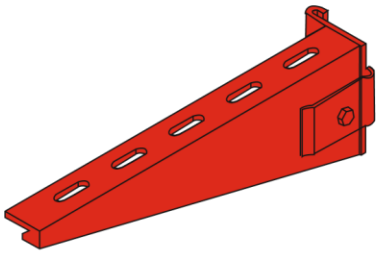

METAR 912 **U - Support Bracket**

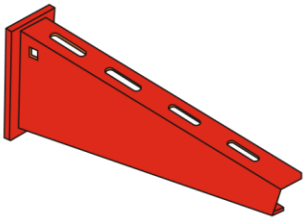

METAR 913 **Joint Bracket**
(Vertical / Horizontal)

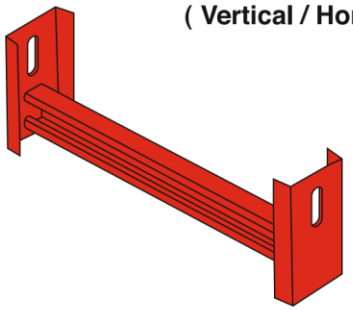

METAR 914 **U Support Connector**

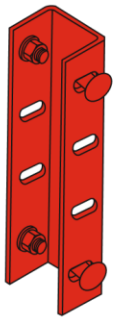

METAR 915 **Spacer**

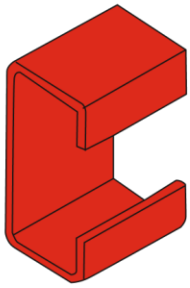

Fastners

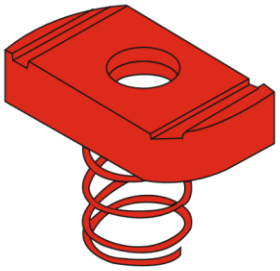

Channel Nut with short spring

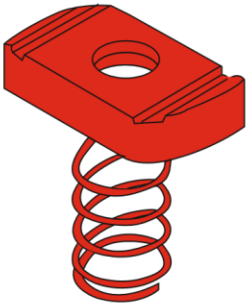

Channel Nut with long spring

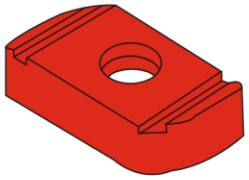

Channel Nut without spring

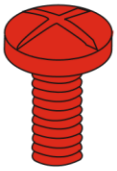

Machine Screw

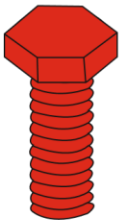

Hexagonal Bolt

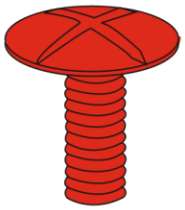

Roo ng Bolt

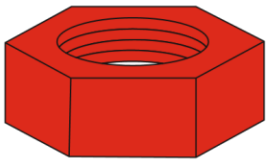

Hexagonal Nut

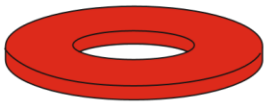

Flat Washer

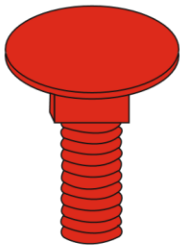

Carriage Bolt

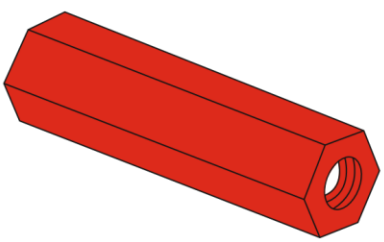

Channel Nut

Threaded Rod

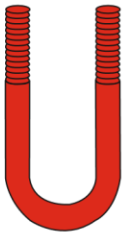

U - Bolt

Properties of Section Profiles

Loading tables

PC 44

PC42

	Ax s XX			

	Moment of nert a (mm4)	Sect c on modu us Z (mm 3)	Rad us of gyrat on r (mm)	Max mum Bend n Moment M (Nm)
PC 44	75000	3400	14 9	530
PC 42	13000	1000	7 5	156
BTB 44	380000	9300	23 8	1455
BTB 42	59000	2800	11 3	435
		Ax s YY		
	Moment of nert a (mm4)	Sect c on modu us Z (mm 3)	Rad us of gyrat on r (mm)	Max mum Bend n Moment M (Nm)
PC 44	93000	4600	16 6	720
PC 42	56000	2700	15 6	420
BTB 44	186000	9200	16 6	1440
BTB 42	112000	5400	15 6	845

sta e t e twee s ts (mm	Safe W k a l as t ta s a (kN	at 8 e e t k N	at 3 e e t kN	Max m m Ax a a l kN m
5	8 48	(	(	(5
	4 24		3 3	33 5
5	2 8		4	2
2	2 2	8	84	2 7
25	7	7	53	
3	4	75	37	7
5((	2 5		2 32	2 4
1(((	1 25	1 1	(58	11 5

NOTES:

15((	(83	(51	(2€	5 2
2(((	(€1	(2 }	(14	
25((	(5(	(18	((}	
3(((	(41	(12		

BTB 44

st
t et
s
(m
5

5
2
25
3

BTB 42

a e wee ts m	Safe W k a t as t ta a s s a (kN 2 3 28	at 8 e t N ((k	at 3 e t e kN (	Max m m Ax a m a t (kN 5 (
	>4 7 7 } 5 82		7 5 4 3	}3 3 4 2
	4 }5		2 7	2 } 8
	3 88	3 8	ç	ç

5((	€ }€			€ } (
1(((	3 48		2 €	44 1

Resistance to slip.

To provide resistance to slip at bolted connections it is recommended that M12 set screws should be used with M12 strut channel nuts, toque tightened to 65 Nm.

The loading data for bracket connections is given with other data on brackets, this incorporates resistance to slip.

15((	2 32	2 3	1 2	23 (
2(((	1 74	1 3	((	13 3
25((	1 3)	(8	(4	8 7
3(((	1 1(	((	(3	

Important notes on loading data supplied:
Loads have been treated as imposed loads in accordance with BS 5950 with a load factor of 1.6

Beam loads - assumptions

- Beams are simply supported over span L
- Load is applied perpendicular to the axis XX
- There is lateral restraint to the beams
- No restriction to loads which may exceed slip resistance of bracket xings

Column loads - assumptions

- Distance between supports is the "effective length" of column
- Slenderness ratio is calculated with the lesser value of radius of gyration of the profile, and restricted to L/r < 180
- In practical assembly conditions, using brackets, it will be necessary to calculate the bending moment and combine with axial column loading to establish a safe working load.

Pull out loads

Strut ch· ɛ ut ty	Rɛc mmɛ ɛ m· x mum
M1 2	ϑ (
M1 (	7 (
M8	5 (
M(	3 5

NOTES:

NOTES:

NOTES:

www.anbisolutions.com

ANBI General Trading LLC.
04 336 1377

ANBI Air Condition Trading LLC.
04 338 7577

ANBI Air Condition Trading LLC. Branch
Al Nahda, Sharjah UAE