Series W-M115 Thread BSPT（DN32-DN50）

Series W-M115 Flange（DN50-DN300）

Pressure Reducing Valve

Application:

The Watts W-M115 Pressure Reducing Valve is designed to adjust, set and maintain downstream pressure of pipeline. It's generally used in city water supply, industrial and agricultural water transmission pipeline, etc.

Features:

1. Stable performance, safe and reliable.
2. Simple operation, convenient adjusting.
3. Precise pressure reducing.
4. Long service life.

Operating Principles:

The Watts ACV Pressure Reducing Control Valve is designed to automatically reduce a fluctuating higher upstream pressure to a constant lower downstream pressure regardless of varying flow rates. It is controlled by a normally open, pressure reducing pilot designed to: 1) Open (allowing fluid out of the main valve cover chamber) when downstream pressure is below the adjustable setpoint, and 2) Close (allowing fluid to fill the main valve cover chamber) when downstream pressure is above the adjustable setpoint. A decrease in downstream pressure causes the valve to modulate toward an open position, raising downstream presure. An increase in downstream pressure causes the valve to modulate toward a closed position, lowering downstream pressure.

Technical Specification:

Nominal Diameter:	DN32~DN300
Maximum Pressure:	PN16/CL150/CL300
Working Temperature:	0℃~80℃
Fluid Medium:	Water
Test Standard:	ISO/DIS 5208:2007
Pressure Reducing Range:	10PSI~125PSI (0.07MPa~0.9MPa)
	Optional 20Psi ~175Psi(0.137Mpa~1.2Mpa)
	30Psi~300Psi(0.206Mpa~2.06Mpa)
Standard pressure setting:	50Psi (0.35MPa)
Connection Type:	Thread / Flanged
Connection Standard:	CL 300 BSPT to ISO 7-1
	PN16 to BS EN 1092-2
	CL150 to ANSI B16.42
	CL300 to ANSI B16.42

ISO 9001-2008 CERTIFIED

WATTS®

Component Material:

Body/Bonnet: Ductile iron with epoxy resin ,NSF certified coating.
Stem/Seat: Stainless steel
Diaphragm: NBR+Nylon
Seal ring: NBR

Installation Dimensions:

Connection Dimension: PN16 to BS EN 1092-2

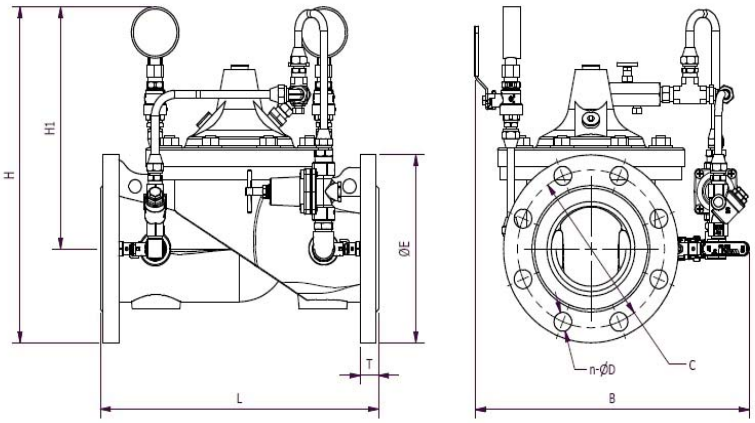

Size DN	Dimensions(mm)				Flange Dimensions(mm)				Weight(Kg)
	L	H	H1	B	C	n-φD	E	T	
32 BSPT	184	305	271	235	/	/	/	/	17.5
40 BSPT	184	305	271	235	/	/	/	/	17.5
50 BSPT	238	315	268	250	/	/	/	/	18.2
50	230	325	245	260	125	4-φ19	165	19	18.6
65	290	343	250	265	145	4-φ19	185	19	19.2
80	310	345	245	275	160	8-φ19	200	19	20.1
100	350	395	285	345	180	8-φ19	220	19	36.5
125	400	413	288	380	210	8-φ19	250	19	58.6
150	480	430	288	405	240	8-φ23	285	19	72
200	600	540	370	475	295	12-φ23	340	20	140
250	660	650	450	560	355	12-φ28	406	30.5	265
300	762	755	520	670	410	12-φ28	482	31.8	465

*Please contact the local salesmen if the size ≥DN300 are needed.

Flow Rates:

Size (DN)	32	40	50	65	80	100	150	200	250	300
Maximum Continuous(GPM)	95	130	210	300	485	800	1850	3100	5000	7000
Maximum Intermittent(GPM)	119	161	265	390	590	1000	2300	4000	6250	8725
Minimum Continuous(GPM)	1	1	1	20	30	50	115	200	300	400

*NOTE：The above chart is a suggested guide Inlet pressure, outlet pressure, minimum, normal and maximum flow rates should be considered for specific valve sizing. Contact Watts ACV details.

WATTS®

ISO 9001-2008 CERTIFIED

Cavitation Chart:

After selecting the valve size, locate inlet and outlet pressure on this chart. If the intersection point falls in the shaded area, cavitation can occur. Operation of valves continually in the cavitation zone should be avoided. Consult Watts ACV for alternatives.

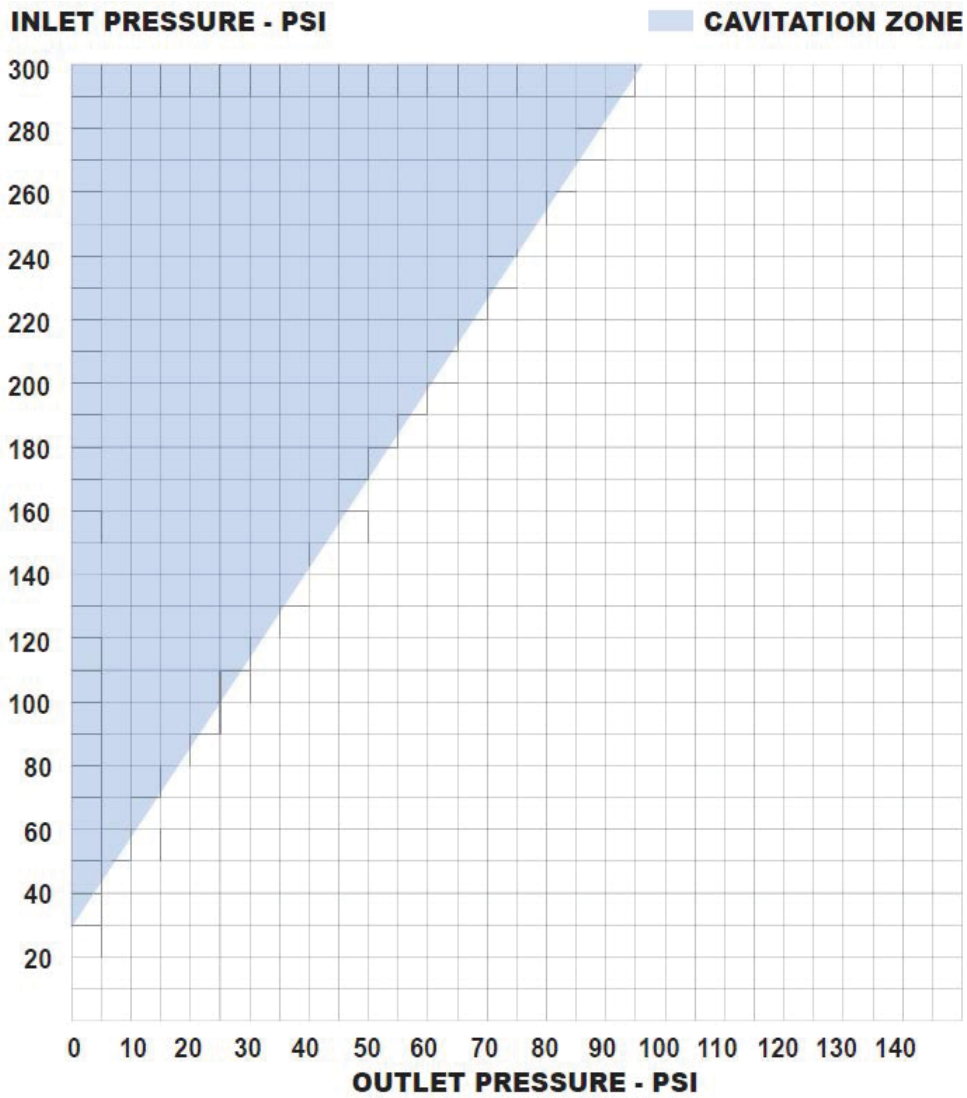

Typical Application:

1. Water plant and water source project.
2. Environmental protection.
3. Municipal facilities.
4. Electric power and utilities.
5. Construction industry.

ISO 9001-2008 CERTIFIED

WATTS®

Installation Instructions:

1. The installer must be trained or experienced so as to operate the installation correctly.
2. Water supply pipe network should be washed before pressure reducing valve installation, eliminating sand, gravel and other debris in the pipe.
3. The flow direction from inlet to outlet should be paid attention to in installation, and maintenance space around the valve is convenient to assemble.
4. For the size below DN150, the main valve can be installed horizontally or vertically, but horizontal installation is better. The size above DN150 only can be installed horizontally.
5. After debugging, the pilot valve and the needle type flow valve must be locked with locknut.
6. Valve should be checked regularly, ensuring the debris in filter being cleaned.
7. Dimension of Tubing: Size: 3/8” and 1/2”
8. Pilot valve: 10 to 125Psi —LF26A
   20 to 175Psi —LF263AP
   30 to 300Psi—LFCP15
9. The pressure gauge range: 0-350Psi.