Clivet-2006-1H2005

CLIVET
Commercial Air Conditioners 2020

Fan Coil Units

CLIVET SPA
Via Camp Lonc 25, Z.I. Villapaiera - 32032 Feltre (BL) - Italy
Tel. + 39 0439 3131 - Fax + 39 0439 313300 - info@clivet.it

CLIVET RUSSIA
Elektrozavodskaya st. 24, office 509 - 107023, Moscow, Russia
Tel. + 74956462009 - Fax + 74956462009 - info.ru@clivet.com

CLIVET AIRCONDITIONING SYSTEMS PRIVATE LIMITED
4BA, Gundecha Onclave, Kherani Road - Sakinaka, Andheri (East) - Mumbai 400 072 - India
Tel. +91 22 6193 7000 - Fax +91 22 6193 7001 - info.in@clivet.com

www.clivet.com
www.clivetlive.com

A Group Company of
Midea

Always ready for the Future

Clivet. Change things

40
agencies in Italy

630
employees in Italy and abroad

75
countries we export to

50.000 m²
of plants in Feltre, Belluno - Italy

6
branches: Great Britain, Germany, Spain, Russia, UAE, India

2015
Clivet Live is born

2016
A Group Company of Midea

140
service centres

FORTUNE GLOBAL 500
Midea Group **#323** in 2018

39.5 $M
Midea turnover

For 30 years we have been offering solutions to ensure sustainable comfort and the well-being of people and the environment

In 30 years of working on the design, manufacturing and distribution of air conditioning and handling systems, combining high efficiency with minimal environmental impact, Clivet has developed solutions to ensure sustainable comfort and the well-being of people and the environment.
Designing and developing year-round air conditioning solutions with innovative technologies are part of Clivet's DNA, which means the company has always been ready for the future.

Our values in the residential, commercial and industrial sectors

Increasing comfort, saving energy and providing customers with the best value for the entire life cycle of the system: these are the values that inspire our systems for the residential, services and industrial sectors.

INCREASE COMFORT LEVEL

REDUCE ENERGY CONSUMPTION

REDUCE TOTAL LIFE CYCLE COST

Contents

05 AC Fan Coil Units

23 DC Fan Coil Units

42 Control Solutions

TERMINAL Fan Coil Units

Commercial

	ELFOSpace	ELFODuct MP	ELFODuct HP	ELFOSpace BOX3	ELFOSpace WALL3
Capacities (A27/W7)	1.5 ÷ 8.25 kW	2.2 ÷ 17.4 kW	6.6 ÷ 19.9 kW	2.98 ÷ 11.2 kW	2.7 ÷ 4.9 kW
Vertical cased					
Horizontal cased					
Vertical uncased					
Horizontal uncased					
2 pipes	✓	✓	✓	✓	✓
4 pipes	✓	✓		✓	
DC Motor	✓	✓		✓	✓
ESP High head			✓		
RS485 Connection	✓		✓	✓	✓

CFK

007.0÷041.0

Water terminal unit
Cassette-type indoor installation
Capacity from 3 to12.9kW

ELFOSpace BOX3

*The **ELFOSpace BOX3** terminal unit has been designed for installation in suspended ceilings without requiring any extra part for operation.*
The ELFOSpace BOX3 is therefore suited for use in environments such as shops, restaurants, hotels and gyms, where the excellent outflowing air control makes them ideal air-conditioning units:

- ▶ *versions for 2 and 4-pipe systems;*
- ▶ *available with standard AC Brushless motor;*
- ▶ *4-way cassette suited for installation in standard suspended ceilings with 840 x 840 mm module;*
- ▶ *Compact 4-way cassette suited for installation in standard suspended ceilings with 575 x 575 mm module;*
- ▶ *standard version with infrared electronics;*
- ▶ *the unit comes with a condensate drain pump built-in.*

2 Pipe

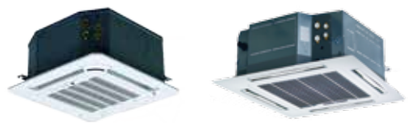

4 Pipe

functions and features

4-way Cassette

Various Selections

- ▶ Versions for 2/4 pipe systems.
- ▶ Versions for compact/normal size.

Stylish Panel with Large Airflow Outlet

- ▶ 4-way air supply panel is standard for 4-way cassette.
- ▶ 360°air supply panel is standard for compact 4-way cassette.

4-way panel

360°panel

Compact Design, Easy Installation

- ▶ For Compact Four-way Cassette: Extremely compact casing suits any room's decor and requires little space for installation on a low ceiling.
- ▶ Due to compact body and light weight, all models can be installed without a hoist.

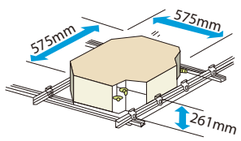

Various Accessories Selections

- ▶ Safe factory-installed electric heater is optional.
- ▶ Extended drainage pan is optional.
- ▶ Wireless controller is standard, and wired controller is optional.

High-lift Drain Pump

- ▶ Standard built-in drain pump with 750mm pump head for normal size and 500mm for compact size.

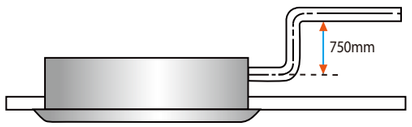

Fresh Air Intake

- ▶ Fresh air can enter through the cassette unit so you can enjoy even fresher air in a room.

dimensions

Thickness of the front panel

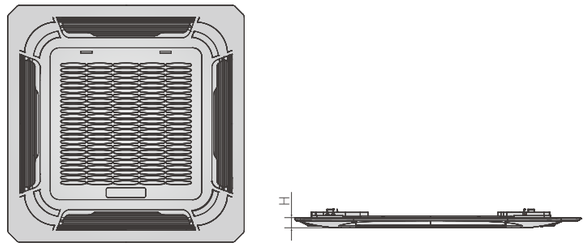

Type	H (mm)
4-way cassette	45
Compact 4-way cassette	50

2-pipe compact 4-way cassette
Dimensions (unit: mm)

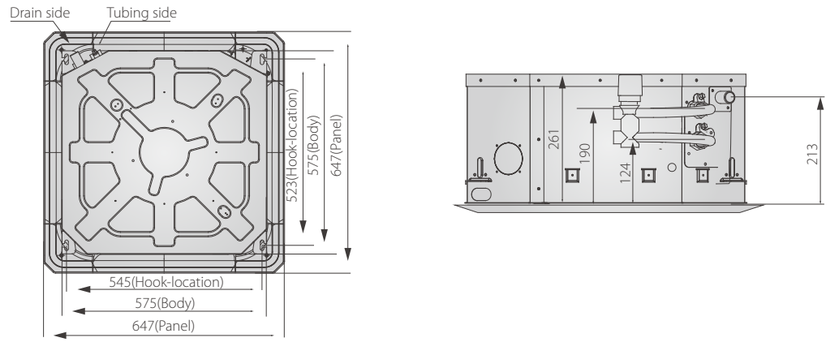

4-pipe compact 4-way cassette
Dimensions (unit: mm)

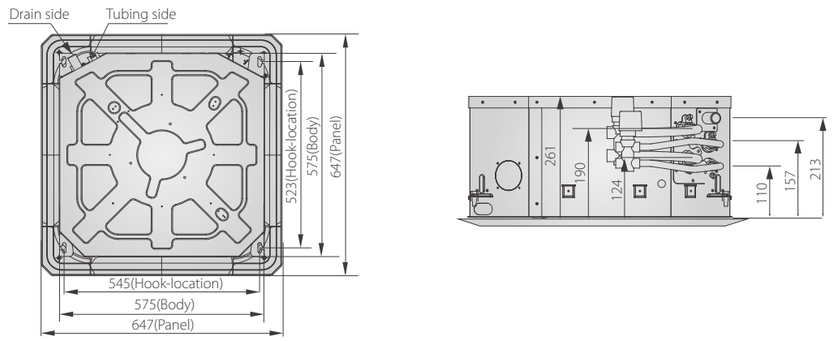

Service Space (unit: mm)

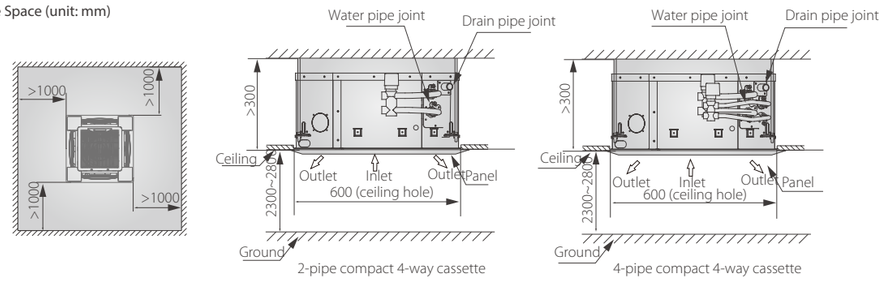

AC Fan Coil Units

2-Pipe 4-Way Cassette

Model			CFKA 021.0 CC2	CFKA 024.0 CC2	CFKA 026.0 CC2	CFKA 027.0 CC2	CFKA 031.0 CC2	CFKA 041.0 CC2
Power supply		V/ph/Hz	220-240/1/50					
Air flow (H/M/L)		m^3/h	1000/850/720	1250/1060/900	1400/1190/1010	1600/1360/1150	2000/1700/1440	2550/2170/1840
		CFM	590/500/420	740/620/530	820/700/590	940/800/680	1180/1000/850	1500/1280/1080
Cooling	Capacity (H/M/L)	kW	5.7/4.73/3.96	7/5.62/4.72	7.27/6.46/5.71	8.22/7.39/6.54	10.39/9.25/8.2	12.9/11.51/10.21
	Water flow rate(H/M/L)	L/h	980	1204	1250	1414	1787	2219
	Water pressure drop(H/M/L)	kPa	23.8	25.2	27	31.2	44	40
Heating	Capacity (H/M/L)	kW	9.66/7.72/6.27	11.55/9.24/7.51	12.42/9.93/8.07	13.85/11.08/9	17.58/14.06/11.42	17.6/14.08/11.44
	Water flow rate(H/M/L)							
	Water pressure drop(H/M/L)	kPa	16.4	11.8	14.6	14.8	34.7	36.7
Power input (H/M/L)		W	125/84/74	130/102/93	150/124/106	155/131/106	190/127/109	190/136/109
Auxiliary electric heater (AEH)		W	2100	2100	2850	2850	2850	/
Sound pressure level (H/M/L)		dB(A)	45/41/36	46/42/37	47/43/38	48/44/39	49/45/40	50/46/41
Fan motor	Type		Low noise 4-speed fan motor					
	Quantity		1	1	1	1	1	1
Fan	Type		Centrifugal, forward-curved blades					
	Quantity		1	1	1	1	1	1
Coil	Row		2	2	2	2	2	3
	Max. working pressure	MPa	1.6	1.6	1.6	1.6	1.6	1.6
	Diameter	mm	Φ7	Φ7	Φ7	Φ7	Φ7	Φ7
Panel	Net dimensions (W×H×D)	mm	950×45×950	950×45×950	950×45×950	950×45×950	950×45×950	950×45×950
	Packing size (W×H×D)	mm	1035×90×1035	1035×90×1035	1035×90×1035	1035×90×1035	1035×90×1035	1035×90×1035
	Net weight	kg	6	6	6	6	6	6
	Gross weight	kg	9	9	9	9	9	9
Body	Net dimensions (W×H×D)	mm	840×230×840	840×230×840	840×300×840	840×300×840	840×300×840	840×300×840
	Packing size (W×H×D)	mm	900×260×900	900×260×900	900×330×900	900×330×900	900×330×900	900×330×900
	Net weight (non-AEH/with-AEH)	kg	25/27	25/27	30.5/33	30.5/33	30.5/33	31.8
	Gross weight (non-AEH/with-AEH)	kg	30/32	30/32	36.2/39	36.2/39	36.2/39	36
Pipe connections	Water inlet/outlet pipe	inch	RC3/4	RC3/4	RC3/4	RC3/4	RC3/4	RC3/4
	Drain pipe	mm	ODΦ32	ODΦ32	ODΦ32	ODΦ32	ODΦ32	ODΦ32

2-Pipe Compact 4-Way Cassette

Model			CFKA 007.0 CC2	CFKA 011.0 CC2	CFKA 015.0 CC2
Power supply		V/Ph/Hz	220-240/1/50		
Air flow (H/M/L)		m^3/h	510/440/360	680/580/480	850/730/600
		CFM	300/260/210	400/340/280	500/430/350
Cooling	Capacity (H/M/L)	kW	3/2.58/2.16	3.7/3.18/2.66	4.5/3.6/3.06
	Water flow rate(H/M/L)	L/h	516	636	774
	Water pressure drop(H/M/L)	kPa	14	15	16
Heating	Capacity (H/M/L)	kW	4/3.5/3.08	5.1/4.3/3.83	6/4.76/4.07
	Water pressure drop(H/M/L)	kPa	12	13	15
Power input (H/M/L)		W	50/40/30	70/50/40	95/53/42
Sound pressure level (H/M/L)		dB(A)	36/33/28	42/39/32	45/42/34
Fan motor	Type		Low noise 4-speed fan motor		
	Quantity		1	1	1
Fan	Type		Centrifugal, forward-curved Blades		
	Quantity		1	1	1
Coil	Row		2	2	2
	Max. working pressure	MPa	1.6	1.6	1.6
	Diameter	mm	Φ7	Φ7	Φ7
Panel	Net dimensions (W×H×D)	mm	647×50×647	647×50×647	647×50×647
	Packing size (W×H×D)	mm	715×123×715	715×123×715	715×123×715
	Net weight	kg	2.5	2.5	2.5
	Gross weight	kg	4.5	4.5	4.5
Body	Net dimensions (W×H×D)	mm	575×261×575	575×261×575	575×261×575
	Packing size (W×H×D)	mm	670×290×670	670×290×670	670×290×670
	Net weight	kg	16.5	16.5	16.5
	Gross weight	kg	20	20	20
Pipe connections	Water inlet/outlet pipe	inch	G3/4	G3/4	G3/4
	Drain pipe	mm	ODΦ25	ODΦ25	ODΦ25

Notes:
1. H: High fan speed; M: Medium fan speed; L: Low fan speed.
2. Cooling conditions: Entering water 7°C, leaving water 12°C, Entering air temperature 27°C DB/19°C WB.
   Heating conditions: Entering water 50°C, the same water flow as the cooling conditions, Entering air temperature 20°C DB.
3. Noise is tested in a semi-anechoic test room.

4-Pipe 4-Way Cassette

Model			CFKA 021.0 CC4	CFKA 024.0 CC4	CFKA 026.0 CC4	CFKA 027.0 CC4	CFKA 031.0 CC4	CFKA 041.0 CC4
Power supply		V/Ph/Hz	220-240/1/50					
Air flow (H/M/L)		m^3/h	1150/800/690	1460/1020/880	1480/1040/890	1720/1200/1030	1860/1300/1110	2100/1470/1260
		CFM	680/470/410	860/600/510	870/610/520	1010/700/610	1090/760/650	1230/860/740
Cooling	Capacity (H/M/L)	kW	5.1/4.08/3.76	5.93/4.41/3.94	6.17/5.13/4.59	6.7/5.48/4.85	9.28/7.45/6.5	10.58/7.45/6.5
	Water flow rate(H/M/L)	L/h	877	1020	1061	1152	1596	1820
	Water pressure drop(H/M/L)	kPa	15	17	20	22	32	38
Heating	Capacity (H/M/L)	kW	6.67/5.87/5.07	7.87/6.85/5.9	8.06/6.93/6.05	8.67/7.63/6.59	11.65/10.49/8.85	12.62/11.36/9.47
	Water flow rate(H/M/L)	L/h	574	677	693	746	1002	1085
	Water pressure drop(H/M/L)	kPa	37	41	39	42	57	61
Power input (H/M/L)		W	170/120/85	188/135/90	198/140/100	205/145/105	197/135/103	234/165/115
Sound pressure level (H/M/L)		dB(A)	42/32/26	44/34/28	46/36/30	47/38/32	48/40/34	50/42/36
Fan motor	Type		Low noise 4-speed fan motor					
	Quantity		1	1	1	1	1	1
Fan	Type		Centrifugal, forward-curved Blades					
	Quantity		1	1	1	1	1	1
Coil	Row		2	2	2	2	3	3
	Max. working pressure	MPa	1.6	1.6	1.6	1.6	1.6	1.6
	Diameter	mm	Φ7	Φ7	Φ7	Φ7	Φ7	Φ7
Panel	Net dimensions (W×H×D)	mm	950×45×950	950×45×950	950×45×950	950×45×950	950×45×950	950×45×950
	Packing size (W×H×D)	mm	1035×90×1035	1035×90×1035	1035×90×1035	1035×90×1035	1035×90×1035	1035×90×1035
	Net weight	kg	6	6	6	6	6	6
	Gross weight	kg	9	9	9	9	9	9
Body	Net dimensions (W×H×D)	mm	840×300×840	840×300×840	840×300×840	840×300×840	840×300×840	840×300×840
	Packing size (W×H×D)	mm	900×330×900	900×330×900	900×330×900	900×330×900	900×330×900	900×330×900
	Net weight	kg	35	35	35	35	38	38
	Gross weight	kg	41	41	41	41	44	44
Pipe connections	Water inlet/outlet pipe	inch	Cold water: RC3/4; Hot water: RC1/2					
	Drain pipe	mm	ODΦ32	ODΦ32	ODΦ32	ODΦ32	ODΦ32	ODΦ32

4-Pipe Compact 4-Way Cassette

Model			CFKA 007.0 CC4	CFKA 011.0 CC4	CFKA 015.0 CC4
Power supply		V/Ph/Hz	220-240/1/50		
Air flow (H/M/L)		m^3/h	510/440/360	680/580/480	850/730/600
		CFM	300/260/210	400/340/280	500/430/350
Cooling	Capacity (H/M/L)	kW	2.5/2.2/1.76	2.9/2.55/2.04	3.5/2.87/2.15
	Water flow rate(H/M/L)	L/h	430	499	602
	Water pressure drop(H/M/L)	kPa	22	16	24
Heating	Capacity (H/M/L)	kW	3.7/3.29/2.92	4.6/3.82/3.4	5.1/4.03/3.52
	Water flow rate(H/M/L)	L/h	318	396	439
	Water pressure drop(H/M/L)	kPa	17	23	27
Power input (H/M/L)		W	50/40/30	70/50/40	95/65/50
Sound pressure level (H/M/L)		dB(A)	36/33/28	42/39/32	45/42/34
Fan motor	Type		Low noise 4-speed fan motor		
	Quantity		1	1	1
Fan	Type		Centrifugal, forward-curved Blades		
	Quantity		1	1	1
Coil	Row		2	2	2
	Max. working pressure	MPa	1.6	1.6	1.6
	Diameter	mm	Φ7	Φ7	Φ7
Panel	Net dimensions (W×H×D)	mm	647×50×647	647×50×647	647×50×647
	Packing size (W×H×D)	mm	715×123×715	715×123×715	715×123×715
	Net weight	kg	2.5	2.5	2.5
	Gross weight	kg	4.5	4.5	4.5
Body	Net dimensions (W×H×D)	mm	575×261×575	575×261×575	575×261×575
	Packing size (W×H×D)	mm	670×290×670	670×290×670	670×290×670
	Net weight	kg	16.5	16.5	16.5
	Gross weight	kg	20	20	20
Pipe connections	Water inlet/outlet pipe	inch	Cold water: G3/4; Hot water: G1/2		
	Drain pipe	mm	ODΦ25	ODΦ25	ODΦ25

Notes:
1. H: High fan speed; M: Medium fan speed; L: Low fan speed.
2. Cooling conditions: Entering water 7°C, leaving water 12°C, Entering air temperature 27°C DB/19°C WB.
   Heating conditions: Entering water 70°C, leaving water 60°C, Entering air temperature 20°C DB.
3. Noise is tested in a semi-anechoic test room.

CFDA MP

006.0÷058.0

Water terminal unit
Uncased horizontal and vertical indoor installation
Ductable
Capacity from 2.2 to 17.4

ELFODuct

*The **ELFODuct MP** are the air-treatment water terminal units ideal for installations where ducted air distribution is necessary. The units are designed for installation in suspended ceilings or lining walls and are characterized by their compactness and extremely low noise levels.*
The advantages of the new series are:

- *Version for 2 and 4-pipe systems;*
- *Version for horizontal installations in suspended ceilings;*
- *Available head up to **50 Pa**;*
- *Very low sound levels;*
- *Internal exchanger with large exchange surface, easily reversed water connections even on construction site;*
- *Complete accessories range for the full installation;*

functions and features

Various Selections

- Versions for 2/4 pipe systems.
- Versions for normal/large temperature difference systems.
- Large range of available static pressure.
- Wired controller is optional.
- Four fan speeds are avaliable: low, medium, high and one reserved for more choice.
- The stainless steel drain pan can be customized. 3-way valve is optional.

High Efficiency

- Highly efficient heat exchange for complete contranatant flow.

Standard Return Air Plenum and Filter

- Standard return air plenum and filter guarantees clean air supply and stable air flow rate.

Flexible Installation

- Left and right hand piping connections are optional, flexible installation.

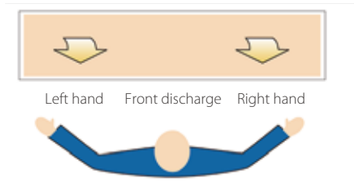

Fresh Air Intake

- Fresh air can enter through the duct unit so you can enjoy even fresher air in a room.

dimensions

(unit: mm)

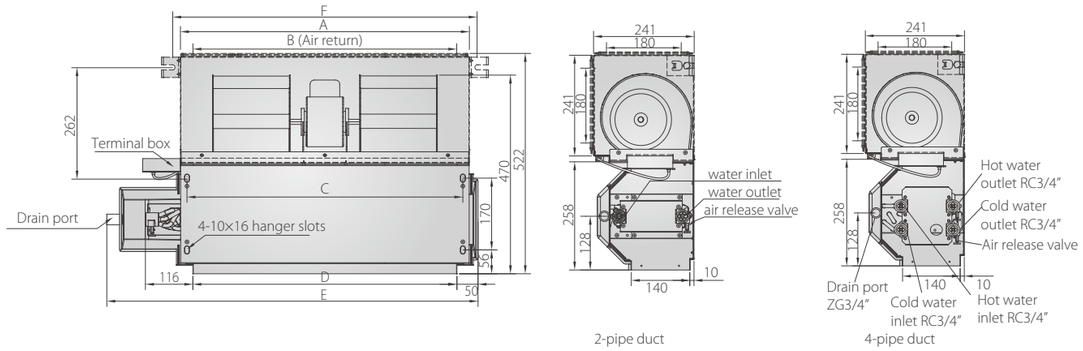

Size	A	B	C	D	E	F
CFDA(S) 006.0	545	485	513	485	741	583
CFDA(S) 007.0	645	585	613	585	841	683
CFDA(S) 011.0	745	685	713	685	941	783
CFDA(S) 015.0	745	685	713	685	941	783
CFDA(S) 021.0	965	905	933	905	1161	1003
CFDA 025.0	1265	1205	1233	1205	1461	1303
CFDA 028.0	1370	1310	1338	1310	1566	1408
CFDA 031.0	1660	1600	1628	1600	1856	1698
CFDA 038.0	1826	1766	1794	1766	2022	1864

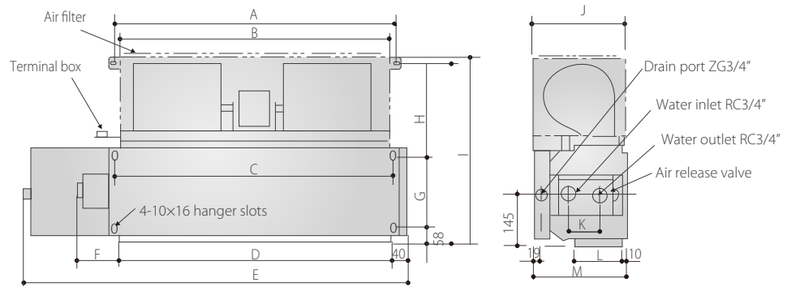

Notes:
This figure is for reference only, actual product may differ.
The dotted line in the figure is the dimension for air return plenum.
Units with air return plenum is standard, unis without air return plenum can be customized.

Size \ Model	CFDA(S) 025.0 R4-50 CFDA(S) 028.0 R4-50	CFDA(S) 031.0 R4-50 CFDA(S) 038.0 R4-50 CFDA(S) 045.0 R4-50	CFDA(S) 051.0 R4-50 CFDA(S) 058.0 R4-50
A	960	1085	1277
B	900	1135	1327
C	910	1112	1308
D	885	1085	1277
E	1180	1369	1500
F	150	160	160
G	195	195	195
H	335	335	335
I	612	612	612
J	342	342	342
K	231	231	231
L	230	230	230
M	340	340	340

technical data

Model			CFDA 006.0 CC2 R3-12 CFDA 006.0 CC2 R3-30	CFDA 007.0 CC2 R3-12 CFDA 007.0 CC2 R3-30	CFDA 011.0 CC2 R3-12 CFDA 011.0 CC2 R3-30	CFDA 015.0 CC2 R3-12 CFDA 015.0 CC2 R3-30	CFDA 021.0 CC2 R3-12 CFDA 021.0 CC2 R3-30
Power supply		V/Ph/Hz	220-240/1/50				
Air flow (H/M/L)		m³/h	340/255/170	510/385/255	680/510/340	850/640/425	1020/765/510
		CFM	200/150/100	300/225/150	400/300/200	500/375/250	600/450/300
Standard external static pressure		Pa	G12 models: 12; G30 models: 30				
Cooling	Capacity (H/M/L)	kW	2.2/1.9/1.68	3.1/2.7/2.3	4/3.4/2.95	4.6/3.96/3.45	5.8/4.88/4.45
	Water flow rate	L/h	378	533	688	791	998
	Water pressure drop	kPa	14	26	18	24	36
Heating	Capacity (H/M/L)	kW	3.5/3.08/2.59	5.3/4.61/3.98	6.8/5.85/5.1	7.9/6.95/6	9.8/8.6/7.4
	Water pressure drop	kPa	10.5	21.8	16.9	22.3	31.6
Power input	12Pa (H/M/L)	W	33/25/22	53/41/35	66/53/48	87/53/44	100/65/55
	30Pa (H/M/L)	W	49/37/33	64/49/42	75/61/54	93/56/47	114/74/63
Auxiliary electric heater (AEH)		W	550	600	1100	1100	1600
Sound pressure level	12Pa (H/M/L)	dB(A)	35/32/26	36/33/27	37/34/28	40/36/30	42/38/32
	30Pa (H/M/L)	dB(A)	41/37/31	42/38/32	43/39/33	44/40/34	45/41/35
Fan motor	Type		Low noise 4-speed fan motor				
	Quantity		1	1	1	1	1
Fan	Type		Centrifugal, forward-curved Blades				
	Quantity		1	2	2	2	2
Coil	Row		3	3	3	3	3
	Max. working pressure	MPa	1.6	1.6	1.6	1.6	1.6
	Diameter	mm	Φ9.52	Φ9.52	Φ9.52	Φ9.52	Φ9.52
Net dimensions (W×H×D)		mm	741×241×522	841×241×522	941×241×522	941×241×522	1161×241×522
Packing size (W×H×D)		mm	790×260×550	890×260×550	990×260×550	990×260×550	1210×260×550
Net weight (non-AEH/with-AEH)		kg	14.6/16.1	17/18.5	20.2/21.7	20.2/21.7	23/25
Gross weight (non-AEH/with-AEH)		kg	16.9/18.4	19.5/21	22.6/24.1	22.6/24.1	26/28
Water inlet/outlet pipe		inch	RC3/4	RC3/4	RC3/4	RC3/4	RC3/4
Drain pipe		inch	ZG3/4	ZG3/4	ZG3/4	ZG3/4	ZG3/4

Model			CFDA 025.0 CC2 R3-12 CFDA 025.0 CC2 R3-30	CFDA 028.0 CC2 R3-12 CFDA 028.0 CC2 R3-30	CFDA 031.0 CC2 R3-12 CFDA 031.0 CC2 R3-30	CFDA 038.0 CC2 R3-12 CFDA 038.0 CC2 R3-30
Power supply		V/Ph/Hz	220-240/1/50			
Air flow (H/M/L)		m³/h	1360/1020/680	1700/1275/850	2040/1530/1020	2380/1785/1190
		CFM	800/600/400	1000/750/500	1200/900/600	1400/1050/700
Standard external static pressure		Pa	G12 models: 12; G30 models: 30			
Cooling	Capacity (H/M/L)	kW	8.2/6.88/6.25	9/7.8/6.57	11/9.8/8.35	12.5/10.8/9.44
	Water flow rate	L/h	1410	1548	1892	2150
	Water pressure drop	kPa	39	32	39	45
Heating	Capacity (H/M/L)	kW	13.6/11.97/10.2	16/14.24/12	20.1/18.27/15.43	21/18.7/15.75
	Water pressure drop	kPa	33.8	30.7	34.6	40.1
Power input	12Pa (H/M/L)	W	145/121/108	180/114/97	210/140/120	222/179/155
	30Pa (H/M/L)	W	154/129/114	180/114/97	220/147/126	278/224/194
Auxiliary electric heater (AEH)		W	2000	2200	3200	3200
Sound pressure level	12Pa (H/M/L)	dB(A)	43/39/33	45/41/35	46/42/36	48/44/38
	30Pa (H/M/L)	dB(A)	46/42/36	47/43/37	48/44/38	49/45/39
Fan motor	Type		Low noise 4-speed fan motor			
	Quantity		2	2	2	2
Fan	Type		Centrifugal, forward-curved Blades			
	Quantity		4	4	4	4
Coil	Row		3	3	3	3
	Max. working pressure	MPa	1.6	1.6	1.6	1.6
	Diameter	mm	Φ9.52	Φ9.52	Φ9.52	Φ9.52
Net dimensions (W×H×D)		mm	1461×241×522	1566×241×522	1856×241×522	2022×241×522
Packing size (W×H×D)		mm	1510×260×550	1615×260×550	1905×260×550	2070×260×550
Net weight (non-AEH/with-AEH)		kg	31.9/34.4	34.4/37.4	39.5/43	43.1/47.1
Gross weight (non-AEH/with-AEH)		kg	35.5/38	38.1/41.1	43/46.5	48.4/52.4
Water inlet/outlet pipe		inch	RC3/4	RC3/4	RC3/4	RC3/4
Drain pipe		inch	ZG3/4	ZG3/4	ZG3/4	ZG3/4

Notes:
1. H: High fan speed; M: Medium fan speed; L: Low fan speed.
2. The data is the performance in relevant standard external static pressure.
3. Cooling conditions: Entering water 7°C, leaving water 12°C, Entering air temperature 27°C DB/19°C WB.
   Heating conditions: Entering water 50°C, the same water flow as the cooling conditions, Entering air temperature 20°C DB.
4. Noise is tested in a semi-anechoic test room.

AC Fan Coil Units

technical data

Model			CFDA 006.0 CC2 R4-30	CFDA 007.0 CC2 R4-30	CFDA 011.0 CC2 R4-30	CFDA 015.0 CC2 R4-30	CFDA 021.0 CC2 R4-30
Power supply		V/Ph/Hz	220-240/1/50				
Air flow (H/M/L)		m³/h	340/255/170	510/385/255	680/510/340	850/640/425	1020/765/510
		CFM	200/150/100	300/225/150	400/300/200	500/375/250	600/450/300
Standard external static pressure		Pa	30	30	30	30	30
Cooling	Capacity (H/M/L)	kW	2.5/2.16/1.87	3.3/2.85/2.47	4.4/3.72/3.22	4.8/4.18/3.64	6.2/5.38/4.65
	Water flow rate	L/h	430	568	757	826	1066
	Water pressure drop	kPa	2.6	5	8.1	9.8	15.4
Heating	Capacity (H/M/L)	kW	4.1/3.51/3.03	5.8/5.05/4.35	7.1/6.11/5.33	8.5/7.04/6.28	10.5/9.03/7.77
	Water pressure drop	kPa	2.2	4.2	6.9	8.1	12.7
Power input (H/M/L)		W	50/40/35	65/52/46	80/64/56	98/78/69	110/88/77
Sound pressure level		dB(A)	37/33/27	38/34/28	38/35/29	40/35/30	41/36/31
Fan motor	Type		Low noise 4-speed fan motor				
	Quantity		1	1	1	1	1
Fan	Type		Centrifugal, forward-curved Blades				
	Quantity		1	2	2	2	2
Coil	Row		4	4	4	4	4
	Max. working pressure	MPa	1.6	1.6	1.6	1.6	1.6
	Diameter	mm	Φ9.52	Φ9.52	Φ9.52	Φ9.52	Φ9.52
Net dimensions (W×H×D)		mm	741×241×522	841×241×522	941×241×522	941×241×522	1161×241×522
Packing size (W×H×D)		mm	790×260×550	890×260×550	990×260×550	990×260×550	1210×260×550
Net weight		kg	15.3	17.5	20.7	20.7	23.5
Gross weight		kg	17.6	20	23.1	23.1	26.5
Water inlet/outlet pipe		inch	RC3/4	RC3/4	RC3/4	RC3/4	RC3/4
Drain pipe		inch	ZG3/4	ZG3/4	ZG3/4	ZG3/4	ZG3/4

Model			CFDA 025.0 CC2 R4-30	CFDA 028.0 CC2 R4-30	CFDA 031.0 CC2 R4-30	CFDA 038.0 CC2 R4-30
Power supply		V/Ph/Hz	220-240/1/50			
Air flow (H/M/L)		m³/h	1360/1020/680	1700/1275/850	2040/1530/1020	2380/1785/1190
		CFM	800/600/400	1000/750/500	1200/900/600	1400/1050/700
Standard external static pressure		Pa	30	30	30	30
Cooling	Capacity (H/M/L)	kW	8.8/7.43/6.57	9.5/8.18/7.06	11.8/9.82/8.74	13/11.23/9.83
	Water flow rate	L/h	1514	1634	2030	2236
	Water pressure drop	kPa	12.3	18	21.2	24.7
Heating	Capacity (H/M/L)	kW	14.5/12.38/10.88	16.3/13.45/12.05	16.5/14.05/12.23	17/14.31/12.69
	Water pressure drop	kPa	10	15.4	17.6	20.8
Power input (H/M/L)		W	155/124/109	180/144/126	220/176/154	275/220/193
Sound pressure level		dB(A)	42/37/32	44/39/33	45/40/34	47/42/36
Fan motor	Type		Low noise 4-speed fan motor			
	Quantity		2	2	2	2
Fan	Type		Centrifugal, forward-curved Blades			
	Quantity		4	4	4	4
Coil	Row		4	4	4	4
	Max. working pressure	MPa	1.6	1.6	1.6	1.6
	Diameter	mm	Φ9.52	Φ9.52	Φ9.52	Φ9.52
Net dimensions (W×H×D)		mm	1461×241×522	1566×241×522	1856×241×522	2022×241×522
Packing size (W×H×D)		mm	1510×260×550	1615×260×550	1905×260×550	2070×260×550
Net weight		kg	32.9	35.4	40.5	44.1
Gross weight		kg	36.5	39.1	44	49.4
Water inlet/outlet pipe		inch	RC3/4	RC3/4	RC3/4	RC3/4
Drain pipe		inch	ZG3/4	ZG3/4	ZG3/4	ZG3/4

Notes:
1. H: High fan speed; M: Medium fan speed; L: Low fan speed.
2. The data is the performance in relevant standard external static pressure.
3. Cooling conditions: Entering water 7°C, leaving water 12°C, Entering air temperature 27°C DB/19°C WB.
   Heating conditions: Entering water 50°C, the same water flow as the cooling conditions, Entering air temperature 20°C DB.
4. Noise is tested in a semi-anechoic test room.

technical data

Model			CFDA 025.0 CC2 R4-50	CFDA 028.0 CC2 R4-50	CFDA 031.0 CC2 R4-50
Power supply		V/Ph/Hz	220-240/1/50		
Air flow (H/M/L)		m^3/h	1400/1342/1200	1650/1527/1405	2040/1851/1666
		CFM	856/790/706	970/900/827	1206/1090/981
Standard external static pressure		Pa	50	50	50
Cooling	Capacity (H/M/L)	kW	7.92/7.56/7.09	8.15/7.93/7.54	10.8/10.17/9.55
	Water flow rate	L/h	1363	1402	1890
	Water pressure drop	kPa	13.5	21.4	27.8
Heating	Capacity (H/M/L)	kW	10.42/9.89/9.12	11.25/10.72/10.06	14.3/13.23/12.22
	Water pressure drop	kPa	39.7	23.3	24.8
Power input (H/M/L)		W	144/124/105	176/146/128	320/284/250
Sound pressure level		dB(A)	48.4/47.9/46.6	49.5/48.1/47.3	50.9/50/48.5
Fan motor	Type		Low noise 4-speed fan motor		
	Quantity		1	1	1
Fan	Type		Centrifugal, forward-curved Blades		
	Quantity		2	2	2
Coil	Row		4	4	4
	Max. working pressure	MPa	1.6	1.6	1.6
	Diameter	mm	Φ9.52	Φ9.52	Φ9.52
Net dimensions (W×H×D)		mm	1180x340x612	1180x340x612	1369x340x612
Packing size (W×H×D)		mm	1310x380x693	1310x380x693	1490x380x693
Net weight		kg	39.3	40.8	46.3
Gross weight		kg	47	49.6	56.4
Water inlet/outlet pipe		inch	RC3/4	RC3/4	RC3/4
Drain pipe		inch	ZG3/4	ZG3/4	ZG3/4

Model			CFDA 038.0 CC2 R4-50	CFDA 045.0 CC2 R4-50	CFDA 051.0 CC2 R4-50	CFDA 058.0 CC2 R4-50
Power supply		V/Ph/Hz	220-240/1/50			
Air flow (H/M/L)		m^3/h	2420/1851/1666	2430/1917/1742	3380/2239/1878	3670/2544/2199
		CFM	1427/1090/981	1431/1128/1025	1990/1318/1105	2160/1497/1294
Standard external static pressure		Pa	50	50	50	50
Cooling	Capacity (H/M/L)	kW	12.14/10.17/9.55	12.19/10.54/9.87	16.16/12.35/11.01	17.34/13.75/12.44
	Water flow rate	L/h	2089	2096	2779	2983
	Water pressure drop	kPa	32.5	33.4	58.3	61.5
Heating	Capacity (H/M/L)	kW	16.08/13.23/12.22	16.55/13.83/12.9	21.7/15.79/13.91	23.4/17.92/16.08
	Water pressure drop	kPa	29.2	30.0	52.3	52.9
Power input (H/M/L)		W	392/284/250	482/338/296	538/358/308	583/387/334
Sound pressure level		dB(A)	51.7/50/49.5	52.9/50.7/50	53.6/51.1/50.2	54.4/52.7/51.6
Fan motor	Type		Low noise 4-speed fan motor			
	Quantity		1	1	1	1
Fan	Type		Centrifugal, forward-curved Blades			
	Quantity		2	2	3	3
Coil	Row		4	4	4	4
	Max. working pressure	MPa	1.6	1.6	1.6	1.6
	Diameter	mm	Φ9.52	Φ9.52	Φ9.52	Φ9.52
Net dimensions (W×H×D)		mm	1369x340x612	1369x340x612	1500x340x612	1500x340x612
Packing size (W×H×D)		mm	1490x380x693	1490x380x693	1620x380x693	1620x380x693
Net weight		kg	46.3	46.3	54.8	54.8
Gross weight		kg	56.4	56.4	64.6	64.6
Water inlet/outlet pipe		inch	RC3/4	RC3/4	RC3/4	RC3/4
Drain pipe		inch	ZG3/4	ZG3/4	ZG3/4	ZG3/4

Notes:
1. H: High fan speed; M: Medium fan speed; L: Low fan speed.
2. The data is the performance in relevant standard external static pressure.
3. Cooling conditions: Entering water 7°C, leaving water 12°C, Entering air temperature 27°C DB/19°C WB.
   Heating conditions: Entering water 50°C, the same water flow as the cooling conditions, Entering air temperature 20°C DB.
4. Noise is tested in a semi-anechoic test room.

technical data

Model			CFDAS 006.0 CC2 R4-30	CFDAS 007.0 CC2 R4-30	CFDAS 011.0 CC2 R4-30	CFDAS 015.0 CC2 R4-30	CFDAS 021.0 CC2 R4-30	CFDAS 025.0 CC2 R4-30
Power supply		V/Ph/Hz	220-240/1/50					
Air flow (H/M/L)		m^3/h	430/380/340	600/540/480	700/630/520	900/810/720	1160/1040/930	1400/1342/1200
		CFM	253/224/200	353/318/282	412/370/305	530/476/424	682/612/547	824/789/705
Standard external static pressure		Pa	30	30	30	30	30	50
Cooling	Capacity (H/M/L)	kW	2.05/1.742/1.55	2.61/2.21/1.98	4.03/3.42/3.06	4.57/3.88/3.47	6.39/5.43/4.85	6.93/5.89/5.26
	Water flow rate	L/h	196	249	385	437	610.6	662
	Water pressure drop	kPa	10	10	21	25	53.8	13.3
Power input (H/M/L)		W	47/38/33	65/52/46	78/62/55	92/74/64	116/93/81	144/115/101
Sound pressure level		dB(A)	38/33/27	39/34/28	39/35/29	41/35/30	42/36/31	48/47/46
Fan motor	Type		Low noise 3-speed fan motor					
	Quantity		1	1	1	1	1	1
Fan	Type		Centrifugal, forward-curved blades					
	Quantity		1	2	2	2	2	2
Coil	Row		4	4	4	4	4	4
	Max. working pressure	MPa	1.6	1.6	1.6	1.6	1.6	1.6
	Diameter	mm	Φ9.52	Φ9.52	Φ9.52	Φ9.52	Φ9.52	Φ9.52
Net dimensions (W×H×D)		mm	741×241×522	841×241×522	941×241×522	941×241×522	1161×241×522	1180x340x612
Packing size (W×H×D)		mm	790×260×550	890×260×550	990×260×550	990×260×550	1210×260×550	1310x380x693
Net weight		kg	15.3	17.5	20.7	20.7	23.5	39.3
Gross weight		kg	17.6	20	23.1	23.1	26.5	47
Water inlet/outlet pipe		inch	RC3/4	RC3/4	RC3/4	RC3/4	RC3/4	RC3/4
Drain pipe		inch	ZG3/4	ZG3/4	ZG3/4	ZG3/4	ZG3/4	ZG3/4

Model			CFDAS 028.0 CC2 R4-30	CFDAS 031.0 CC2 R4-30	CFDAS 038.0 CC2 R4-30	CFDAS 045.0 CC2 R4-30	CFDAS 051.0 CC2 R4-30	CFDAS 058.0 CC2 R4-30
Power supply		V/Ph/Hz	220-240/1/50					
Air flow (H/M/L)		m^3/h	1650/1527/1405	2040/1851/1666	2420/1850/1657	2430/1917/1742	3380/2239/1878	3660/2544/2199
		CFM	970/898/826	1200/1089/980	1424/1088/975	1431/1128/1025	1988/1317/1105	2153/1496/1295
Standard external static pressure		Pa	50	50	50	50	50	50
Cooling	Capacity (H/M/L)	kW	7.57/6.43/5.75	10.11/8.59/7.68	11.5/9.7/8.74	11.74/9.97/8.92	14.74/12.52/11.2	16.1/13.68/12.23
	Water flow rate	L/h	723	966	1099	1122	1408	1538
	Water pressure drop	kPa	16.3	21	25.3	27.8	37.9	48.1
Power input (H/M/L)		W	176/141/123	320/256/224	392/314/274	482/386/337	538/430/376	583/466/408
Sound pressure level		dB(A)	49/48/47	51/50/48	52/50/49	53/51/50	54/51/50	54/52/51
Fan motor	Type		Low noise 3-speed fan motor					
	Quantity		1	1	1	1	1	1
Fan	Type		Centrifugal, forward-curved blades					
	Quantity		2	2	2	2	3	3
Coil	Row		4	4	4	4	4	4
	Max. working pressure	MPa	1.6	1.6	1.6	1.6	1.6	1.6
	Diameter	mm	Φ9.52	Φ9.52	Φ9.52	Φ9.52	Φ9.52	Φ9.52
Net dimensions (W×H×D)		mm	1180x340x612	1369x340x612	1369x340x612	1369x340x612	1500x340x612	1500x340x612
Packing size (W×H×D)		mm	1310x380x693	1490x380x693	1490x380x693	1490x380x693	1620x380x693	1620x380x693
Net weight		kg	40.8	46.3	46.3	46.3	54.8	54.8
Gross weight		kg	49.6	56.4	56.4	56.4	64.6	64.6
Water inlet/outlet pipe		inch	RC3/4	RC3/4	RC3/4	RC3/4	RC3/4	RC3/4
Drain pipe		inch	ZG3/4	ZG3/4	ZG3/4	ZG3/4	ZG3/4	ZG3/4

Notes:
1. H: High fan speed; M: Medium fan speed; L: Low fan speed.
2. The data are test under standard external static pressure.
3. Cooling conditions: entering water 5.5°C, temperature rise 9°C, entering air temperature 27°C DB/19°C WB.
4. Noise is tested in a semi-anechoic test room.

technical data

Model				CFDA 006.0 CC4 R3-30	CFDA 007.0 CC4 R3-30	CFDA 011.0 CC4 R3-30	CFDA 015.0 CC4 R3-30	CFDA 021.0 CC4 R3-30
Air flow		H/M/L	m^3/h	340/255/170	510/385/255	680/510/340	850/640/425	1020/765/510
		H/M/L	CFM	200/150/100	300/225/150	400/300/200	500/375/250	600/450/300
External Static pressure			Pa	30	30	30	30	30
Cooling	Capacity	H/M/L	kW	2/1.76/1.52	2.7/2.35/2.13	3.6/3.15/2.76	4.3/3.74/3.32	5/4.32/3.84
	Water flow rate	H	L/h	344	464	619	740	860
	Water pressure drop	H	kPa	7.6	14.4	8.2	9.5	17.2
Heating	Capacity	H/M/L	kW	3/2.64/2.22	4/3.48/3	5.2/4.47/3.9	5.7/5.02/4.33	7.2/6.19/5.33
	Water flow rate	H	L/h	258	344	447	490	619
	Water pressure drop	H	kPa	6.8	12.5	23.5	24	40.7
Power supply			V/Ph/Hz	220-240/1/50	220-240/1/50	220-240/1/50	220-240/1/50	220-240/1/50
Power input			W	49	64	75	96	114
Sound pressure level		H/M/L	dB(A)	41/37/31	42/38/32	43/39/33	44/40/34	45/41/35
Fan motor	Type			Low noise 4-speed fan motor	Low noise 4-speed fan motor	Low noise 4-speed fan motor	Low noise 4-speed fan motor	Low noise 4-speed fan motor
	Quantity			1	1	1	1	1
Fan	Type			Centrifugal, forward-curved Blades				
	Quantity			1	2	2	2	2
Coil	Row			3	3	3	3	3
	Max. working pressure		MPa	1.6	1.6	1.6	1.6	1.6
	Diameter		mm	Φ9.52	Φ9.52	Φ9.52	Φ9.52	Φ9.52
Body	Dimensions	WxHxD	mm	741×241×522	841×241×522	941×241×522	941×241×522	1161×241×522
	Packing	WxHxD	mm	790×260×550	890×260×550	990×260×550	990×260×550	1210×260×550
	Net weight		kg	15.1	17.5	20.7	20.7	23.5
	Gross weight		kg	17.4	20	23.1	23.1	26.5
Pipe connection	Water inlet/outlet pipe		inch	Cold water: RC3/4 Hot water: RC3/4				
	Drain pipe		inch	ZG3/4				

Model				CFDA 025.0 CC4 R3-30	CFDA 028.0 CC4 R3-30	CFDA 031.0 CC4 R3-30	CFDA 038.0 CC4 R3-30
Air flow		H/M/L	m^3/h	1360/1020/680	1700/1275/850	2040/1530/1020	2380/1785/1190
		H/M/L	CFM	800/600/400	1000/750/500	1200/900/600	1400/1050/700
External Static pressure			Pa	30	30	30	30
Cooling	Capacity	H/M/L	kW	6.8/5.78/5.11	7.8/6.74/5.88	10.2/8.89/7.85	11.5/9.9/8.86
	Water flow rate	H	L/h	1170	1342	1754	1978
	Water pressure drop	H	kPa	18.8	30	40.3	51.9
Heating	Capacity	H/M/L	kW	9.6/8.45/7.2	10.8/9.61/8.1	13.5/12.15/10.26	15.5/13.48/11.78
	Water flow rate	H	L/h	826	929	1161	1333
	Water pressure drop	H	kPa	20.7	34.7	28.6	55.2
Power supply			V/Ph/Hz	220-240/1/50	220-240/1/50	220-240/1/50	220-240/1/50
Power input			W	154	193	230	278
Sound pressure level		H/M/L	dB(A)	46/42/36	47/43/37	48/44/38	49/45/39
Fan motor	Type			Low noise 4-speed fan motor	Low noise 4-speed fan motor	Low noise 4-speed fan motor	Low noise 4-speed fan motor
	Quantity			2	2	2	2
Fan	Type			Centrifugal, forward-curved Blades			
	Quantity			4	4	4	4
Coil	Row			3	3	3	3
	Max. working pressure		MPa	1.6	1.6	1.6	1.6
	Diameter		mm	Φ9.52	Φ9.52	Φ9.52	Φ9.52
Body	Dimensions	WxHxD	mm	1461×241×522	1566×241×522	1856×241×522	2022×241×522
	Packing	WxHxD	mm	1510×260×550	1615×260×550	1905×260×550	2070×260×550
	Net weight		kg	32.4	34.9	40	43.6
	Gross weight		kg	36	38.6	43.5	48.9
Pipe connection	Water inlet/outlet pipe		inch	Cold water: RC3/4 Hot water: RC3/4			
	Drain pipe		inch	ZG3/4			

Note:
1.H: high fan speed; M: medium fan speed; L: low fan speed.
2.The data is based on 12Pa external static pressure for G12 models, 30Pa for G30 models.
3.Cooling conditions: entering water 7°C, temperature rise 5°C, entering air temperature 27°C DB,19°C WB.
Heating conditions: entering water 70°C, entering/leaving temperature difference is 10°C, enter air temperature 20°C.
4.Noise is tested in semi-anechoic test room.

CFDA HP

025.0÷061.0

Water terminal unit
Uncased horizontal and vertical indoor installation
Ductable
Capacity from 6,6 to 19,9 kW

ELFODuct

*The **ELFODuct HP** are the air-treatment water terminal units ideal for installations where ducted air distribution is necessary. The units are designed for installation in suspended ceilings and are characterized by their compactness and extremely low noise levels.*

- *Version for horizontal installations in suspended ceilings and version;*
- *Available head up to **100 Pa**;*
- *Very low sound levels;*
- *Internal exchanger with large exchange surface, easily reversed water connections even on construction site;*
- *Complete accessories range for the full installation;*

functions and features

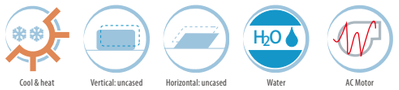

Various Selections

- Versions for 2 pipe systems.
- Large range of available static pressure.
- Wired controller is optional.
- Four fan speeds are avaliable: low, medium, high and one reserved for more choice.

High Efficiency

- Highly efficient heat exchange for complete contranatant flow.

Standard Return Air Plenum and Filter

- Standard return air plenum and filter guarantees clean air supply and stable air flow rate.

Flexible Installation

- Left and right hand piping connections are optional, flexible installation.

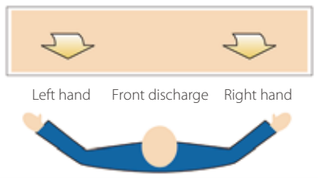

Fresh Air Intake

- Fresh air can enter through the duct unit so you can enjoy even fresher air in a room.

dimensions

(unit: mm)

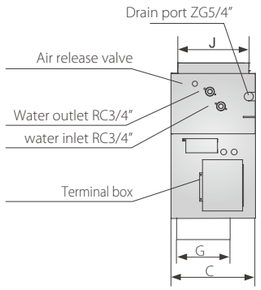

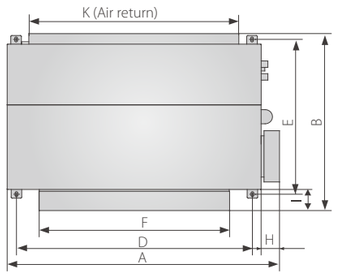

Model / Size	CFDA 025.0 CC2 R3H CFDA 028.0 CC2 R3H CFDA 031.0 CC2 R3H CFDA 038.0 CC2 R3H	CFDA 045.0 CC2 R3H CFDA 051.0 CC2 R3H CFDA 061.0 CC2 R3H
A	946	1290
B	816	809
C	400	400
D	778	1118
E	767	765
F	306	900
G	219	249
H	88	88
I	37	39
J	338	320
K	512	995

technical data

Model			CFDA 025.0 CC2 R3H	CFDA 028.0 CC2 R3H	CFDA 031.0 CC2 R3H	CFDA 038.0 CC2 R3H
Power supply		V/Ph/Hz	220-240/1/50			
Air flow (H/M/L)		m^3/h	1360/1220/1090	1700/1530/1380	2040/1880/1610	2380/2120/1860
		CFM	800/720/640	1000/900/810	1200/1105/950	1400/1250/1095
Standard external static pressure		Pa	70	70	70	70
Cooling	Capacity (H/M/L)	kW	6.6/6.37/6.12	8.8/8.19/7.57	10/9.44/8.53	12/11.47/10.24
	Water flow rate	l/h	1135	1514	1720	2064
	Water pressure drop	kPa	8	24	24	36
Heating	Capacity (H/M/L)	kW	9.7/8.54/7.18	13.2/11.48/9.9	15/12.9/11.25	17.9/15.75/13.6
	Water pressure drop	kPa	8.4	25	23.4	34.2
Power input (H/M/L)		W	320/300/285	350/320/300	350/320/290	350/300/285
Auxiliary electric heater (AEH)		W	5000	5000	5000	5000
Sound pressure level		dB(A)	49/42/35	50/43/36	51/44/37	52/45/38
Fan motor	Type		Low noise 4-speed fan motor			
	Quantity		1	1	1	1
Fan	Type		Centrifugal, forward-curved Blades			
	Quantity		1	1	1	1
Coil	Row		2	3	3	4
	Max. working pressure	MPa	1.6	1.6	1.6	1.6
	Diameter	mm	Φ9.52	Φ9.52	Φ9.52	Φ9.52
Net dimensions(W×H×D)		mm	946×400×816	946×400×816	946×400×816	946×400×816
Packing size (non-AEH/with-AEH)		mm	Left connection: 1075×480×857/1075×480×925			
Net weight (non-AEH/with-AEH)		kg	50/53	52/55	52/55	54/57
Gross weight (non-AEH/with-AEH)		kg	55/58	57/60	57/60	59/62
Water inlet/outlet pipe		inch	RC3/4	RC3/4	RC3/4	RC3/4
Drain pipe		inch	ZG3/4	ZG3/4	ZG3/4	ZG3/4

Model			CFDA 045.0 CC2 R3H	CFDA 051.0 CC2 R3H	CFDA 061.0 CC2 R3H
Power supply		V/Ph/Hz	220-240/1/50		
Air flow (H/M/L)		m^3/h	2720/2450/2170	3060/2750/2450	3740/3360/2990
		CFM	1600/1440/1280	1800/1620/1440	2200/1980/1760
Standard external static pressure		Pa	100	100	100
Cooling	Capacity (H/M/L)	kW	14.1/13.03/11.87	15.8/14.6/13.46	19.9/18.58/17.24
	Water flow rate	l/h	2425	2718	3423
	Water pressure drop	kPa	60	78	110
Heating	Capacity (H/M/L)	kW	21.2/18.23/15.69	23.8/20.94/17.85	30/26.7/22.5
	Water pressure drop	kPa	57	74	105
Power input (H/M/L)		W	550/520/500	800/680/620	950/860/760
Auxiliary electric heater (AEH)		W	9500	9500	9500
Sound pressure level		dB(A)	54/47/40	60/53/46	61/54/47
Fan motor	Type		Low noise 4-speed fan motor		
	Quantity		1	1	1
Fan	Type		Centrifugal, forward-curved Blades		
	Quantity		2	2	2
Coil	Row		3	3	3
	Max. working pressure	MPa	1.6	1.6	1.6
	Diameter	mm	Φ9.52	Φ9.52	Φ9.52
Net dimensions(W×H×D)		mm	1290×400×809	1290×400×809	1290×400×809
Packing size (non-AEH/with-AEH)		mm	Left connection: 1448×460×877/1448×460×950		
Net weight (non-AEH/with-AEH)		kg	76/82	76/82	76/82
Gross weight (non-AEH/with-AEH)		kg	83/89	83/89	83/89
Water inlet/outlet pipe		inch	RC3/4	RC3/4	RC3/4
Drain pipe		inch	ZG3/4	ZG3/4	ZG3/4

Notes:

1. H: High fan speed; M: Medium fan speed; L: Low fan speed.
2. The data is the performance in relevant standard external static pressure.
3. Cooling conditions: Entering water 7℃, leaving water 12℃, Entering air temperature 27℃ DB/19℃ WB.
   Heating conditions: Entering water 50℃, the same water flow as the cooling conditions, Entering air temperature 20℃ DB.
4. Noise is tested in a semi-anechoic test room.

CFF

1÷12

Water terminal unit
Cased and uncased, vertical and horizontal indoor installation
Capacity from 1,65 to 8,25 kW

ELFOSpace

ELFOSpace OUT and IN *are the cased and uncased water terminal for installation in the commercial sector.*

- ▶ *Versions for 2 and 4-pipe systems;*
- ▶ *The available controls are simple and user-friendly, satisfying the most varied of requirements;*
- ▶ *Low noise operation and easy to clean;*
- ▶ *Twelve sizes available with an almost countless number of accessories for resolving any service application.*

functions and features

Feature

- ▶ Ultra-thin, the thickness is only 200mm.

Flexible Installation

- ▶ Cabinet and concealed versions meet various installation requirements.
- ▶ Horizontal or vertical installation.

dimensions

(unit: mm)

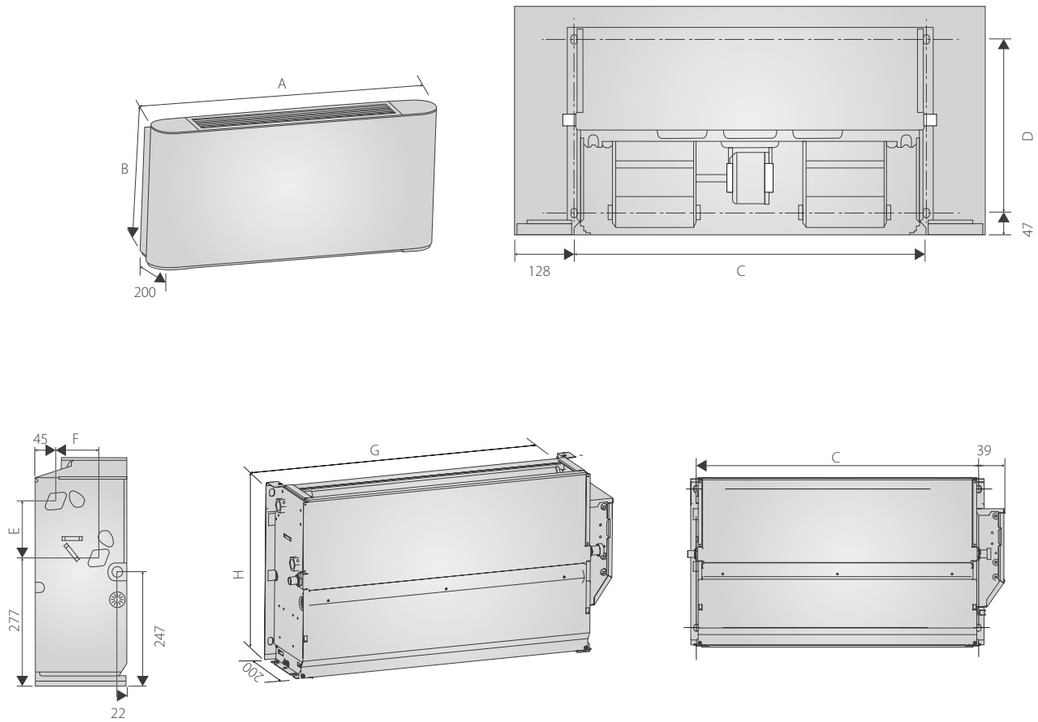

Model	150	250	300	500	700	800
A(mm)	790	1020	1240	1240	1360	1360
B(mm)	495	495	495	495	495	591
C(mm)	534	764	984	984	1104	1104
D(mm)	375	375	375	375	375	319
E(mm)	123	123	123	123	123	219
F(mm)	93	93	93	93	93	102
G(mm)	628	858	1078	1078	1198	1198
H(mm)	455	455	455	455	455	551

technical data

Model			CFFAC 1	CFFAC 2	CFFAC 3	CFFAC 4	CFFAC 5	CFFAC 6
Power supply		V/Ph/Hz	220-240/1/50					
Air flow (H/M/L)		m^3/h	255/165/142	255/192/139	400/273/180	425/284/184	595/447/319	595/450/319
		CFM	150/97/84	150/113/82	235/161/106	250/167/109	350/263/188	350/265/188
External static pressure		Pa	0					
Cooling	Total Capacity (H/M/L)	kW	1.65/1.22/1.09	2.25/1.85/1.40	2.65/2.02/1.40	3.05/2.26/1.58	3.85/3.19/2.46	4.20/3.38/2.48
	Water flow rate (H/M/L)	L/h	283/209/186	386/317/241	454/346/240	523/387/272	660/546/422	720/580/425
	Water pressure drop (H/M/L)	kPa	15.75/9.33/7.37	33.19/22.37/14.64	18.03/11.18/5.48	26.71/15.66/8.42	38.23/27.11/16.96	41.15/27.07/15.71
Heating	Capacity (H/M/L)	kW	1.85/1.29/1.13	2.35/1.87/1.42	3.05/2.24/1.52	3.15/2.28/1.60	4.10/3.30/2.48	4.30/3.43/2.52
	Water flow rate (H/M/L)	L/h	317/222/194	403/320/244	523/384/260	540/392/275	705/568/427	740/590/433
	Water pressure drop (H/M/L)	kPa	15.13/8.22/6.64	33.19/22.37/14.64	17.56/10.28/5.43	23.31/12.57/6.11	35.52/24.83/14.91	37.20/24.50/13.75
Power input (H/M/L)		W	35/17/14	40/24/15	47/26/14	47/26/14	51/32/19	51/32/19
Sound power level	(H/M/L)	dB(A)	47/35/34	53/47/39	46/37/31	47/38/32	52/44/36	52/45/37
Fan motor	Type		AC fan motor					
	Quantity		1	1	1	1	1	1
Fan	Type		Centrifugal, forward-curved Blades					
	Quantity		1	1	2	2	2	2
Coil	Row		3	4	3	4	3	4
	Max. working pressure	MPa	1.6	1.6	1.6	1.6	1.6	1.6
	Diameter	mm	Φ7.94	Φ7.94	Φ7.94	Φ7.94	Φ7.94	Φ7.94
Body	Net dimensions (W×H×D)	mm	495×200×790	495×200×790	495×200×1020	495×200×1020	495×200×1240	495×200×1240
	Packing size (W×H×D)	mm	595×300×895	595×300×895	595×300×1125	595×300×1125	595×300×1345	595×300×1345
	Net weight	kg	16.3	16.7	20.0	20.8	24.0	25.4
	Gross weight	kg	21.8	22.7	26.8	26.8	31.0	32.4
Water inlet/outlet pipe		inch	G3/4	G3/4	G3/4	G3/4	G3/4	G3/4
Drain pipe		mm	ODΦ18.5	ODΦ18.5	ODΦ18.5	ODΦ18.5	ODΦ18.5	ODΦ18.5

Model			CFFAC 7	CFFAC 8	CFFAC 9	CFFAC 10	CFFAC 11	CFFAC 12
Power supply		V/Ph/Hz	220-240/1/50					
Air flow (H/M/L)		m^3/h	790/560/392	800/574/404	1190/855/555	1150/885/591	1300/1088/782	1300/1132/836
		CFM	465/330/231	471/338/238	700/503/327	677/521/348	766/641/461	766/667/492
External static pressure		Pa	0					
Cooling	Total Capacity (H/M/L)	kW	4.65/3.80/2.92	5.35/4.25/3.31	6.00/5.03/3.71	6.75/5.80/4.24	7.35/6.51/5.15	8.25/7.52/5.87
	Water flow rate (H/M/L)	L/h	797/652/500	917/729/567	1029/862/636	1157/995/727	1260/1116/884	1414/1289/1007
	Water pressure drop (H/M/L)	kPa	56.85/40.02/25.31	61.48/41.44/26.62	53.79/36.96/21.16	40.26/29.20/16.15	45.43/37.06/23.29	64.72/55.03/34.88
Heating	Capacity (H/M/L)	kW	5.20/3.95/3.00	5.70/4.36/3.31	6.15/5.10/3.80	7.15/5.81/4.30	8.20/7.09/5.46	8.50/7.60/5.90
	Water flow rate (H/M/L)	L/h	894/679/516	977/747/569	1054/877/654	1226/996/740	1406/1216/937	1457/1302/1015
	Water pressure drop (H/M/L)	kPa	56.68/37.31/23.25	60.89/37.73/21.79	57.85/38.53/21.1	42.16/28.68/14.66	44.60/34.09/19.98	61.96/47.46/28.84
Power input (H/M/L)		W	91/54/34	91/54/35	123/98/68	110/89/64	123/109/83	118/104/82
Sound power level	(H/M/L)	dB(A)	59/51/43	59/51/43	63/56/45	62/56/46	62/58/50	62/58/50
Fan motor	Type		AC fan motor					
	Quantity		1	1	1	1	1	1
Fan	Type		Centrifugal, forward-curved Blades					
	Quantity		2	2	3	3	3	3
Coil	Row		3	4	3	4	3	4
	Max. working pressure	MPa	1.6	1.6	1.6	1.6	1.6	1.6
	Diameter	mm	Φ7.94	Φ7.94	Φ7.94	Φ7.94	Φ7.94	Φ7.94
Body	Net dimensions (W×H×D)	mm	495×200×1240	495×200×1240	495×200×1360	495×200×1360	591×200×1360	591×200×1360
	Packing size (W×H×D)	mm	595×300×1345	595×300×1345	595×300×1465	595×300×1465	695×300×1465	695×300×1465
	Net weight	kg	25.5	26.3	27.3	28.5	31.7	34.0
	Gross weight	kg	32.0	33.4	34.8	36.0	40.2	42.0
Water inlet/outlet pipe		inch	G3/4	G3/4	G3/4	G3/4	G3/4	G3/4
Drain pipe		mm	ODΦ18.5	ODΦ18.5	ODΦ18.5	ODΦ18.5	ODΦ18.5	ODΦ18.5

Notes:
1. H: High fan speed; M: Medium fan speed; L: Low fan speed.
2. Cooling conditions: Entering water 7°C, leaving water 12°C, Entering air temperature 27°C DB/19°C WB.
   Heating conditions: Entering water 45°C, leaving water 40°C, Entering air temperature 20°C DB/15°C WB.
3. Noise is tested in a reverberation chamber.

Model			CFFAU 1	CFFAU 2	CFFAU 3	CFFAU 4	CFFAU 5	CFFAU 6
Power supply		V/Ph/Hz	220-240/1/50					
Air flow (H/M/L)		m^3/h	255/165/142	255/192/139	400/273/180	425/284/184	595/447/319	595/450/319
		CFM	150/97/84	150/113/82	235/161/106	250/167/109	350/263/188	350/265/188
External static pressure		Pa	10					
Cooling	Sensible Capacity(H/M/L)	kW	1.25/0.88/0.78	1.65/1.35/1.04	2.05/1.50/1.02	2.23/1.61/1.15	2.91/2.36/1.77	3.05/2.43/1.73
	Total Capacity (H/M/L)	kW	1.65/1.22/1.09	2.25/1.85/1.46	2.65/2.02/1.40	3.05/2.26/1.63	3.85/3.19/2.46	4.20/3.38/2.48
	Water flow rate (H/M/L)	L/h	283/209/186	386/317/249	454/346/240	523/387/280	660/546/422	720/580/425
	Water pressure drop (H/M/L)	kPa	22.11/13.10/10.35	49.29/33.22/21.74	18.19/11.29/5.53	33.66/19.73/10.61	44.15/31.32/19.59	44.3/29.14/16.91
Heating	Capacity (H/M/L)	kW	1.85/1.29/1.13	2.35/1.87/1.40	3.05/2.24/1.52	3.15/2.09/1.38	3.70/2.97/2.25	4.10/3.25/2.39
	Water flow rate (H/M/L)	L/h	317/222/194	403/320/240	523/384/260	540/357/237	634/510/386	703/557/409
	Water pressure drop (H/M/L)	kPa	16.18/8.79/7.11	36.51/24.61/16.1	17.00/9.95/5.26	25.84/13.93/6.77	37.30/26.07/15.66	39.56/26.06/14.63
Power input (H/M/L)		W	35/17/14	40/24/15	47/26/14	47/26/14	51/32/19	51/32/19
Rated current		A	0.15/0.07/0.06	0.17/0.10/0.07	0.20/0.11/0.06	0.20/0.11/0.06	0.22/0.14/0.08	0.22/0.14/0.08
Sound power level	(H/M/L)	dB(A)	47/35/34	53/47/39	46/37/31	47/38/32	52/44/36	52/45/37
Fan motor	Type		AC fan motor					
	Quantity		1	1	1	1	1	1
Fan	Type		Centrifugal, forward-curved Blades					
	Quantity		1	1	2	2	2	2
Coil	Row		3	4	3	4	3	4
	Max. working pressure	MPa	1.6	1.6	1.6	1.6	1.6	1.6
	Diameter	mm	Φ7.94	Φ7.94	Φ7.94	Φ7.94	Φ7.94	Φ7.94
Body	Net dimensions (W×H×D)	mm	455×200×607	455×200×607	455×200×837	455×200×837	455×200×1057	455×200×1057
	Packing size (W×H×D)	mm	555×255×755	555×255×755	555×255×985	555×255×985	555×255×1205	555×255×1205
	Net weight	kg	11.6	12.0	13.9	14.8	17.3	18.2
	Gross weight	kg	15.9	16.3	19.4	20.3	24.0	24.9
Water inlet/outlet pipe		inch	G3/4	G3/4	G3/4	G3/4	G3/4	G3/4
Drain pipe		mm	ODΦ18.5	ODΦ18.5	ODΦ18.5	ODΦ18.5	ODΦ18.5	ODΦ18.5

Model			CFFAU 7	CFFAU 8	CFFAU 9	CFFAU 10	CFFAU 11	CFFAU 12
Power supply		V/Ph/Hz	220-240/1/50					
Air flow (H/M/L)		m^3/h	790/560/392	800/574/404	1190/855/555	1150/885/591	1300/1088/782	1300/1132/836
		CFM	465/330/231	471/338/238	700/503/327	677/521/348	766/641/461	766/667/492
External static pressure		Pa	10					
Cooling	Sensible Capacity(H/M/L)	kW	3.58/2.85/2.09	3.96/3.08/2.34	4.83/3.99/2.85	5.09/4.36/3.12	5.63/4.92/3.83	6.08/5.53/4.21
	Total Capacity (H/M/L)	kW	4.65/3.80/2.92	5.35/4.25/3.31	6.00/5.03/3.71	6.75/5.80/4.24	7.35/6.51/5.15	8.25/7.52/5.87
	Water flow rate (H/M/L)	L/h	797/652/500	917/729/567	1029/862/636	1157/995/727	1260/1116/884	1414/1289/1007
	Water pressure drop (H/M/L)	kPa	61.58/43.35/27.41	68.61/46.24/29.71	62.13/42.69/24.44	46.5/33.73/18.66	48.82/39.82/25.03	74.76/63.56/40.28
Heating	Capacity (H/M/L)	kW	4.35/3.44/2.62	5.70/4.36/3.22	6.15/4.92/3.49	7.15/5.81/4.04	8.20/7.09/5.46	8.50/7.60/5.72
	Water flow rate (H/M/L)	L/h	746/590/449	977/747/552	1054/844/598	1226/996/692	1406/1216/937	1457/1302/981
	Water pressure drop (H/M/L)	kPa	54.6/35.94/22.4	59.39/36.80/21.25	60.74/40.46/22.16	44.27/30.11/15.39	46.11/35.24/20.65	65.06/49.83/30.28
Power input (H/M/L)		W	91/54/34	91/54/35	123/98/68	110/89/64	123/109/83	118/104/82
Rated current		A	0.40/0.24/0.15	0.40/0.24/0.15	0.53/0.42/0.30	0.48/0.39/0.28	0.53/0.47/0.36	0.51/0.45/0.36
Sound power level	(H/M/L)	dB(A)	59/51/43	59/51/43	63/56/45	62/56/46	62/58/50	62/58/50
Fan motor	Type		AC fan motor					
	Quantity		1	1	1	1	1	1
Fan	Type		Centrifugal, forward-curved Blades					
	Quantity		2	2	3	3	3	3
Coil	Row		3	4	3	4	3	4
	Max. working pressure	MPa	1.6	1.6	1.6	1.6	1.6	1.6
	Diameter	mm	Φ7.94	Φ7.94	Φ7.94	Φ7.94	Φ7.94	Φ7.94
Body	Net dimensions (W×H×D)	mm	455×200×1057	455×200×1057	455×200×1177	455×200×1177	550×200×1177	550×200×1177
	Packing size (W×H×D)	mm	555×255×1205	555×255×1205	555×255×1325	555×255×1325	650×255×1325	650×255×1325
	Net weight	kg	17.9	18.8	20.5	21.7	24.0	25.2
	Gross weight	kg	24.6	25.5	27.3	28.5	31.1	32.3
Water inlet/outlet pipe		inch	G3/4	G3/4	G3/4	G3/4	G3/4	G3/4
Drain pipe		mm	ODΦ18.5	ODΦ18.5	ODΦ18.5	ODΦ18.5	ODΦ18.5	ODΦ18.5

Notes:
1. H: High fan speed; M: Medium fan speed; L: Low fan speed.
2. Cooling conditions: Entering water 7°C, leaving water 12°C, Entering air temperature 27°C DB/19°C WB.
   Heating conditions: Entering water 45°C, leaving water 40°C, Entering air temperature 20°C DB/15°C WB.
3. Noise is tested in a reverberation chamber.
4. Test with concealed tooling.

CFK

007.0÷041.0

Water terminal unit
Cassette-type indoor installation
Capacity from 2,98 to 11,2 kW

2 Pipe

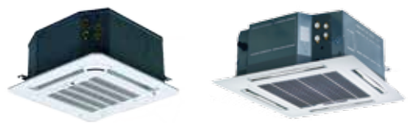

4 Pipe

ELFOSpace BOX3

*The **ELFOSpace BOX3** terminal unit has been designed for installation in suspended ceilings without requiring any extra part for operation.*
The ELFOSpace BOX3 is therefore suited for use in environments such as shops, restaurants, hotels and gyms, where the excellent outflowing air control makes them ideal air-conditioning units:

- *versions for 2 and 4-pipe systems;*
- *available with standard DC Brushless motor;*
- *4-way cassette suited for installation in standard suspended ceilings with 840 x 840 mm module;*
- *Compact 4-way cassette suited for installation in standard suspended ceilings with 575 x 575 mm module;*
- *standard version with infrared electronics;*
- *the unit comes with a condensate drain pump built-in.*

functions and features

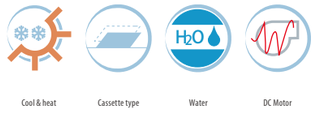

4-way Cassette

Various Selections

- Versions for 2/4 pipe systems.
- Versions for compact/normal size.

Stylish Panel with Large Airflow Outlet

- 4-way air supply panel is standard for 4-way cassette.
- 360°air supply panel is standard for compact 4-way cassette.

4-way panel

360°panel

Compact Design, Easy Installation

- For Compact Four-way Cassette: Extremely compact casing suits any room's decor and requires little space for installation on a low ceiling.
- Due to compact body and light weight, all models can be installed without a hoist.

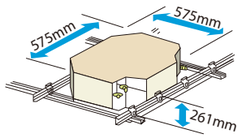

Various Accessories Selections

- Safe factory-installed electric heater is optional.
- Extended drainage pan is optional.
- Wireless controller is standard, and wired controller is optional.

High-lift Drain Pump

- Standard built-in drain pump with 750mm pump head for normal size and 500mm for compact size.

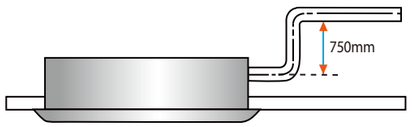

Fresh Air Intake

- Fresh air can enter through the cassette unit so you can enjoy even fresher air in a room.

dimensions

Thickness of the front panel

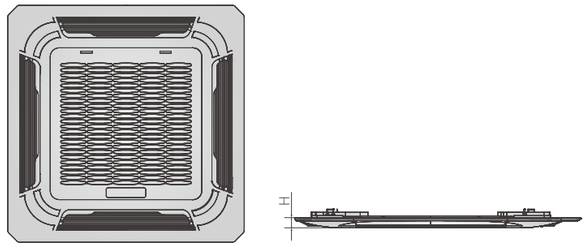

Type	H (mm)
4-way cassette	45
Compact 4-way cassette	50

2-pipe compact 4-way cassette
Dimensions (unit: mm)

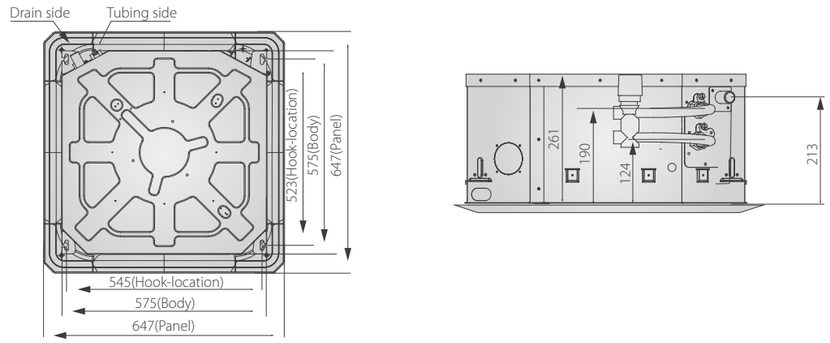

4-pipe compact 4-way cassette
Dimensions (unit: mm)

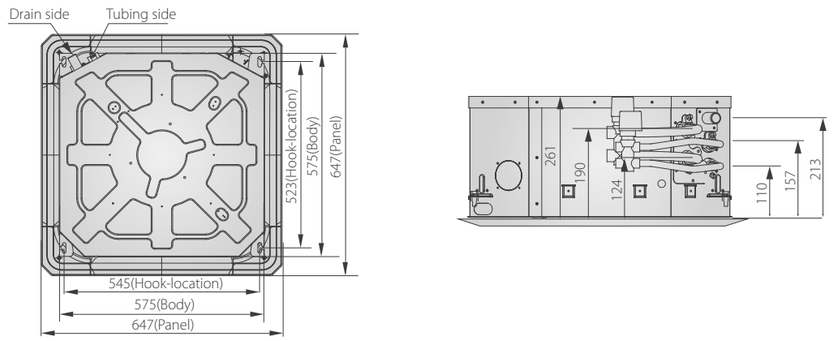

Service Space (unit: mm)

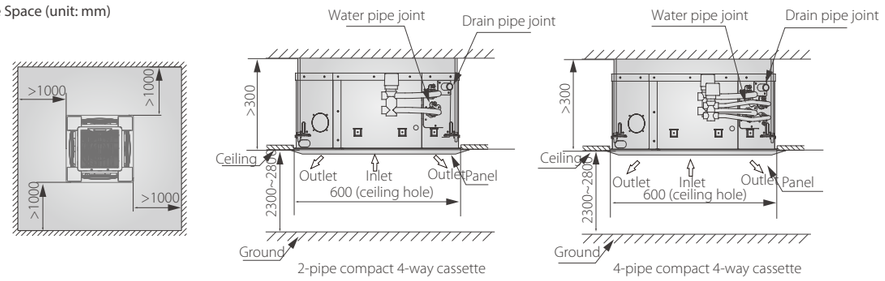

2-Pipe 4-Way Cassette

Model			CFK 021.0 CC2	CFK 024.0 CC2	CFK 024.0 CC2
Power supply		V/Ph/Hz	220-240/1/50		
Air flow (H/M/L)		m^3/h	1175/987/768	1229/1020/810	1451/1146/1012
		CFM	691/580/451	722/600/476	853/674/595
Cooling[1]	Capacity (H/M/L)	kW	5.93/5.3/4.4	6.12/5.45/4.6	7.52/6.46/5.89
	Water flow rate(H/M/L)	m^3/h	1.06/0.92/0.77	1.10/0.96/0.81	1.37/1.18/1.07
	Water pressure drop(H/M/L)	kPa	19.2/15.4/11	21.3/21.3/12.4	20.1/15.3/12.6
	Power input(H/M/L)	W	41/27/17	49/31/20	68/37/30
Heating[2]	Capacity (H/M/L)	kW	6.06/5.88/5.32	6.27/5.72/5.43	7.88/7.48/6.76
	Water flow rate(H/M/L)	m^3/h	1.30/1.14/1.13	1.39/1.20/1.00	1.66/1.39/1.25
	Water pressure drop(H/M/L)	kPa	25.9/20.1/19.9	30/22.7/16.3	26.7/18.8/15.6
	Power input(H/M/L)	W	42/28/17	44/32/21	66/37/28
Heating[3]	Capacity (H/M/L)	kW	8.42/7.37/6.06	8.62/7.49/6.27	10.37/8.72/7.88
	Water flow rate(H/M/L)	m^3/h	1.06/0.92/0.77	1.10/0.96/0.81	1.37/1.18/1.07
	Water pressure drop(H/M/L)	kPa	16.9/12.7/8.6	19.1/14.8/10.6	18.2/13.6/11.1
	Power input(H/M/L)	W	42/28/17	49/31/19	67/37/28
Sound pressure level (H/M/L)		dB(A)	43/39/33	44/40/34	45/40/37
Fan motor	Type		DC Motor	DC Motor	DC Motor
	Quantity		1	1	1
Fan	Type		Centrifugal, forward-curved Blades		
	Quantity		1	1	1
Coil	Row		2	2	2
	Max. Working pressure	MPa	1.6	1.6	1.6
	Diameter	mm	Φ7	Φ7	Φ7
Panel	Net dimensions (W×H×D)	mm	950×45×950	950×45×950	950×45×950
	Packing size (W×H×D)	mm	1035×90×1035	1035×90×1035	1035×90×1035
	Net weight	kg	6	6	6
	Gross weight	kg	9	9	9
Body	Net dimensions (W×H×D)	mm	840×230×840	840×230×840	840×300×840
	Packing size (W×H×D)	mm	900×237×900	900×237×900	900×330×900
	Net weight	kg	23	23	27
	Gross weight	kg	28	28	33
Pipe connections	Water inlet/outlet pipe	inch	RC3/4	RC3/4	RC3/4
	Drain pipe	mm	ODΦ32	ODΦ32	ODΦ32

Model			CFK 024.0 CC2	CFK 024.0 CC2	CFK 041.0 CC2
Power supply		V/Ph/Hz	220-240/1/50		
Air flow (H/M/L)		m^3/h	1530/1224/1101	1581/1371/1236	1871/1415/1198
		CFM	900/720/647	930/806/727	1100/832/704
Cooling[1]	Capacity (H/M/L)	kW	7.84/6.84/6.35	7.87/7.12/6.67	11.19/8.82/7.48
	Water flow rate(H/M/L)	m^3/h	1.43/1.24/1.13	1.44/1.28/1.22	1.96/1.53/1.28
	Water pressure drop(H/M/L)	kPa	22/17/14.1	22.3/18.1/16.3	36.6/22.7/16.4
	Power input(H/M/L)	W	75/42/34	85/59/45	126/58/39
Heating[2]	Capacity (H/M/L)	kW	8.49/8/7.35	9.16/8.54/7.9	10.07/9.37/8.68
	Water flow rate(H/M/L)	m^3/h	1.71/1.45/1.33	1.73/1.57/1.46	2.35/1.86/1.59
	Water pressure drop(H/M/L)	kPa	28.1/20.7/17.4	28.8/24/20.7	49.2/31.2/23.3
	Power input(H/M/L)	W	76/43/33	86/59/45	128/58/38
Heating[3]	Capacity (H/M/L)	kW	10.86/9.24/8.49	10.92/9.84/9.16	14.92/11.73/10.07
	Water flow rate(H/M/L)	m^3/h	1.43/1.24/1.13	1.44/1.28/1.22	1.96/1.53/1.28
	Water pressure drop(H/M/L)	kPa	19.9/15.2/12.6	20/16.2/14.7	34.3/21.3/15
	Power input(H/M/L)	W	76/42/33	85/58/45	127/58/39
Sound pressure level (H/M/L)		dB(A)	46/42/39	48/44/41	49/43/39
Fan motor	Type		DC Motor	DC Motor	DC Motor
	Quantity		1	1	1
Fan	Type		Centrifugal, forward-curved Blades		
	Quantity		1	1	1
Coil	Row		2	2	3
	Max. Working pressure	MPa	1.6	1.6	1.6
	Diameter	mm	Φ7	Φ7	Φ7
Panel	Net dimensions (W×H×D)	mm	950×45×950	950×45×950	950×45×950
	Packing size (W×H×D)	mm	1035×90×1035	1035×90×1035	1035×90×1035
	Net weight	kg	6	6	6
	Gross weight	kg	9	9	9
Body	Net dimensions (W×H×D)	mm	840×300×840	840×300×840	840×300×840
	Packing size (W×H×D)	mm	900×330×900	900×330×900	900×330×900
	Net weight	kg	27	27	29.5
	Gross weight	kg	33	33	34.5
Pipe connections	Water inlet/outlet pipe	inch	RC3/4	RC3/4	RC3/4
	Drain pipe	mm	ODΦ32	ODΦ32	ODΦ32

Notes:

H:High fan speed; M: Medium fan speed; L: Low fan speed.

1:Cooling mode (2 and 4-pipe coil): entering air temperature 27°C DB/19°C WB, entering/leaving water temperature 7°C /12°C.

2:Heating mode(1): (2-pipe coil): entering air temperature 20°C DB, entering/leaving water temperature 45/40°C.

3:Heating mode(2): (2-pipe coil): entering air temperature 20°C DB, enter water teperaure/water flow 50°C/*(same water flow as in standard rating condition in cooling)

4:Noise is tested in a semi-anechoic test room.

4-Pipe 4-Way Cassette

Model			CFK 021.0 CC4	CFK 024.0 CC4	CFK 026.0 CC4
Power supply		V/Ph/Hz	220-240/1/50		
Air flow (H/M/L)		m^3/h	1184/997/783	1278/1057/855	1328/1052/927
		CFM	696/586/460	751/621/502	780/618/545
Cooling[1]	Capacity (H/M/L)	kW	4.96/4.383/3.642	5.178/4.563/3.875	5.129/4.413/4.06
	Water flow rate(H/M/L)	m^3/h	0.9/0.8/0.67	0.94/0.83/0.71	0.93/0.81/0.75
	Water pressure drop(H/M/L)	kPa	14.8/11.5/8.1	15.9/12.4/9	16/14.2/10.4
	Power input(H/M/L)	W	55/36/21	66/42/25	75/42/32
Heating[2]	Capacity (H/M/L)	kW	6.148/5.43/4.614	6.519/5.785/4.944	6.684/5.748/5.283
	Water flow rate(H/M/L)	m^3/h	0.58/0.52/0.45	0.61/0.55/0.47	0.62/0.54/0.50
	Water pressure drop(H/M/L)	kPa	25.3/20.5/14.5	32/25.7/19.1	32.6/24.7/21.2
	Power input(H/M/L)	W	56/36/21	67/42/25	75/41/31
Heating[3]	Capacity (H/M/L)	kW	6.94/6.217/5.266	7.374/6.533/5.6	7.657/6.584/6.033
	Water flow rate(H/M/L)	m^3/h	0.64/0.58/0.50	0.68/0.61/0.53	0.71/0.61/0.57
	Water pressure drop(H/M/L)	kPa	37.2/26.1/19.3	39.5/32.5/23.8	41.6/31.5/26.8
	Power input(H/M/L)	W	55/36/21	68/43/25	76/42/31
Sound power level	(H/M/L)	dB(A)	54/49/43	56/51/45	57/51/48
Sound pressure level	(H/M/L)	dB(A)	42/37/31	44/39/33	45/39/36
Rated current		A	0.48	0.6	0.72
Fan motor	Type		7	DC motor	DC motor
	Quantity		1	1	1
Fan	Type		Centrifugal, forward-curved Blades		
	Quantity		1	1	1
Coil	Row		2	2	2
	Max. working pressure	MPa	1.6	1.6	1.6
	Diameter	mm	Φ7	Φ7	Φ7
Panel	Net dimensions (W×H×D)	mm	950×45×950	950×45×950	950×45×950
	Packing size (W×H×D)	mm	1035×90×1035	1035×90×1035	1035×90×1035
	Net weight	kg	6	6	6
	Gross weight	kg	9	9	9
Body	Net dimensions (W×H×D)	mm	840×300×840	840×300×840	840×300×840
	Packing size (W×H×D)	mm	900×330×900	900×330×900	900×330×900
	Net weight	kg	27.5	27.5	27.5
	Gross weight	kg	33.5	33.5	33.5
Pipe connections	Water inlet/outlet pipe	inch	Cold water: RC3/4; Hot water: RC1/2		
	Drain pipe	mm	ODΦ32	ODΦ32	ODΦ32

Model			CFK 027.0 CC4	CFK 031.0 CC4	CFK 041.0 CC4
Power supply		V/Ph/Hz	220-240/1/50		
Air flow (H/M/L)		m^3/h	1403/1115/1001	1642/1421/1285	1708/1297/1096
		CFM	824/655/588	965/835/755	1004/762/644
Cooling[1]	Capacity (H/M/L)	kW	5.306/4.593/4.279	7.984/7.245/6.697	8.038/6.623/5.837
	Water flow rate(H/M/L)	m^3/h	0.96/0.84/0.78	1.42/1.29/1.2	1.43/1.19/1.05
	Water pressure drop(H/M/L)	kPa	16.4/12.6/10.9	33.9/30/24	33/22.6/17.7
	Power input(H/M/L)	W	85/46/35	118/78/59	125/64/42
Heating[2]	Capacity (H/M/L)	kW	6.736/5.833/5.442	9.746/8.962/8.422	9.93/8.326/7.512
	Water flow rate(H/M/L)	m^3/h	0.63/0.55/0.52	0.89/0.82/0.77	0.90/0.76/0.69
	Water pressure drop(H/M/L)	kPa	34/26.6/23.5	42.4/36.6/32.6	48.7/32.5/27
	Power input(H/M/L)	W	84/46/35	118/79/61	125/64/42
Heating[3]	Capacity (H/M/L)	kW	7.659/6.646/6.204	11.045/10.149/9.527	11.342/9.596/8.683
	Water flow rate(H/M/L)	m^3/h	0.71/0.62/0.58	1.0/0.92/0.87	1.02/0.87/0.79
	Water pressure drop(H/M/L)	kPa	43.8/33.5/29.3	52.1/44.9/40.6	62.1/45.7/38.3
	Power input(H/M/L)	W	84/45/35	118/79/61	125/64/42
Sound power level	(H/M/L)	dB(A)	58/53/50	60/56/54	61/55/50
Sound pressure level	(H/M/L)	dB(A)	46/41/38	48/44/42	49/43/38
Rated current		A	0.72	1.08	1.32
Fan motor	Type		DC motor	DC motor	DC motor
	Quantity		1	1	1
Fan	Type		Centrifugal, forward-curved Blades		
	Quantity		1	1	1
Coil	Row		2	3	3
	Max. working pressure	MPa	1.6	1.6	1.6
	Diameter	mm	Φ7	Φ7	Φ7
Panel	Net dimensions (W×H×D)	mm	950×45×950	950×45×950	950×45×950
	Packing size (W×H×D)	mm	1035×90×1035	1035×90×1035	1035×90×1035
	Net weight	kg	6	6	6
	Gross weight	kg	9	9	9
Body	Net dimensions (W×H×D)	mm	840×300×840	840×300×840	840×300×840
	Packing size (W×H×D)	mm	900×330×900	900×330×900	900×330×900
	Net weight	kg	27.5	30	30
	Gross weight	kg	32.4	35	35
Pipe connections	Water inlet/outlet pipe	inch	Cold water: RC3/4; Hot water: RC1/2		
	Drain pipe	mm	ODΦ32	ODΦ32	ODΦ32

Notes:

H: High fan speed; M: Medium fan speed; L: Low fan speed.

1: Cooling mode (2 and 4-pipe coil): entering air temperature 27°C DB/1 9°C WB, entering/leaving water temperature 7°C /12°C.

2: Heating mode(1): (4-pipe coil): entering air temperature 20°C DB, entering/leaving water temperature 65/55°C.

3: Heating mode(2): (4-pipe coil): entering air temperature 20°C DB, entering/leaving water temperature 70/60°C.

4.Sound pressure level is tested in a semi-anechoic test room.

5.Sound power level is tested in a reverberation chamber.

2-Pipe Compact 4-Way Cassette

Model			CFK 007.0 CC2	CFK 011.0 CC2	CFK 015.0 CC2
Power supply		V/Ph/Hz	220-240/1/50		
Air flow (H/M/L)		m^3/h	535/429/322	610/477/381	781/611/494
		CFM	314/252/189	359/281/224	459/359/290
Cooling[1]	Capacity (H/M/L)	kW	2.98/2.53/2	3.96/3.26/2.76	4.2/3.48/3.01
	Water flow rate(H/M/L)	m^3/h	0.53/0.45/0.35	0.7/0.58/0.51	0.75/0.61/0.54
	Water pressure drop(H/M/L)	kPa	10/7/5	11.48/8.2/6.54	12.32/8.62/7.4
	Power input(H/M/L)	W	15/9/5	28/15/9	43/28/21
Heating[2]	Capacity (H/M/L)	kW	2.61/2.31/2.24	4.08/3.34/2.73	4.95/3.99/3.26
	Water flow rate(H/M/L)	m^3/h	0.64/0.54/0.42	0.83/0.67/0.56	0.87/0.70/0.58
	Water pressure drop(H/M/L)	kPa	12.1/8.5/5.3	9.2/8.6/6	9.4/8.23/6.1
	Power input(H/M/L)	W	15/9/5	28/16/10	33/18/11
Heating[3]	Capacity (H/M/L)	kW	4.01/3.35/2.61	4.78/3.84/3.18	5.76/4.69/3.84
	Water flow rate(H/M/L)	m^3/h	0.53/0.45/0.35	0.7/0.58/0.51	0.75/0.61/0.54
	Water pressure drop(H/M/L)	kPa	8.2/6/3.8	12.68/6.4/4.92	11.41/6.5/5.41
	Power input(H/M/L)	W	14/9/5	28/16/10	33/18/11
Sound pressure level	(H/M/L)	dB(A)	39/33/27	42/36/30	43/38/32
Fan motor	Type		DC Motor	DC Motor	DC Motor
	Quantity		1	1	1
Fan	Type		Centrifugal, forward-curved Blades		
	Quantity		1	1	1
Coil	Row		2	2	2
	Max. working pressure	MPa	1.6	1.6	1.6
	Diameter	mm	Φ7	Φ7	Φ7
Panel	Net dimensions (W×H×D)	mm	647×50×647	647×50×647	647×50×647
	Packing size (W×H×D)	mm	715×123×715	715×123×715	715×123×715
	Net weight	kg	2.5	2.5	2.5
	Gross weight	kg	4.5	4.5	4.5
Body	Net dimensions (W×H×D)	mm	575×261×575	575×261×575	575×261×575
	Packing size (W×H×D)	mm	670×290×670	670×290×670	670×290×670
	Net weight	kg	16.5	16.5	16.5
	Gross weight	kg	22.5	22.5	22.5
Pipe connections	Water inlet/outlet pipe	inch	G3/4	G3/4	G3/4
	Drain pipe	mm	ODΦ25	ODΦ25	ODΦ25

4-Pipe Compact 4-Way Cassette

Model			CFK 007.0 CC4	CFK 011.0 CC4	CFK 015.0 CC4
Power supply		V/Ph/Hz	220-240/1/50		
Air flow (H/M/L)		m^3/h	493/395/295	669/523/415	673/526/425
		CFM	290/232/173	393/307/244	395/309/250
Cooling[1]	Capacity (H/M/L)	kW	2.161/1.861/1.485	2.777/2.375/2.045	2.771/2.382/2.069
	Water flow rate(H/M/L)	m^3/h	0.42/0.37/0.3	0.53/0.46/0.4	0.56/0.49/0.43
	Water pressure drop(H/M/L)	kPa	17.4/13.5/9.3	13.15/9.4/7	16.8/13.1/10.3
	Power input(H/M/L)	W	15/10/6	30/26/21	35/19/12
Heating[2]	Capacity (H/M/L)	kW	3.131/2.628/2.077	3.711/3.138/2.65	3.942/3.296/2.826
	Water flow rate(H/M/L)	m^3/h	0.32/0.28/0.23	0.37/0.32/0.28	0.42/0.36/0.32
	Water pressure drop(H/M/L)	kPa	23.5/17.1/11.3	24.1/17.9/13.1	26.8/19.2/14.5
	Power input(H/M/L)	W	17/10/6	32/18/11	35/18/11
Heating[3]	Capacity (H/M/L)	kW	3.564/2.989/2.356	4.251/3.584/3.023	4.508/3.789/3.222
	Water flow rate(H/M/L)	m^3/h	0.36/0.31/0.25	0.41/0.36/0.31	0.47/0.40/0.36
	Water pressure drop(H/M/L)	kPa	29.8/21.7/14.3	30.4/22.2/16.7	36.1/25.9/19
	Power input(H/M/L)	W	17/10/6	31/18/11	35/19/11
Sound power level	(H/M/L)	dB(A)	51/45/39	54/47/42	56/51/43
Sound pressure level	(H/M/L)	dB(A)	39/33/27	42/35/30	44/39/31
Fan motor	Type		DC motor	DC motor	DC motor
	Quantity		1	1	1
Fan	Type		Centrifugal, forward-curved Blades		
	Quantity		1	1	1
Coil	Row		2	2	2
	Max. working pressure	MPa	1.6	1.6	1.6
	Diameter	mm	Φ7	Φ7	Φ7
Panel	Net dimensions (W×H×D)	mm	647×50×647	647×50×647	647×50×647
	Packing size (W×H×D)	mm	715×123×715	715×123×715	715×123×715
	Net weight	kg	2.5	2.5	2.5
	Gross weight	kg	4.5	4.5	4.5
Body	Net dimensions (W×H×D)	mm	575×261×575	575×261×575	575×261×575
	Packing size (W×H×D)	mm	675×320×675	675×320×675	675×320×675
	Net weight	kg	16.7	16.7	16.7
	Gross weight	kg	22.7	22.7	22.7
Pipe connections	Water inlet/outlet pipe	inch	Cold water: G3/4; Hot water: G1/2		
	Drain pipe	mm	ODΦ25	ODΦ25	ODΦ25

Notes:

H: High fan speed; M: Medium fan speed; L: Low fan speed.

1: Cooling mode (2 and 4-pipe coil): entering air temperature 27°C DB/1 9°C WB, entering/leaving water temperature 7°C /12°C.

2: Heating mode(1): (4-pipe coil): entering air temperature 20°C DB, entering/leaving water temperature 65/55°C.

3: Heating mode(2): (4-pipe coil): entering air temperature 20°C DB, entering/leaving water temperature 70/60°C.

4.Sound pressure level is tested in a semi-anechoic test room.

5.Sound power level is tested in a reverberation chamber.

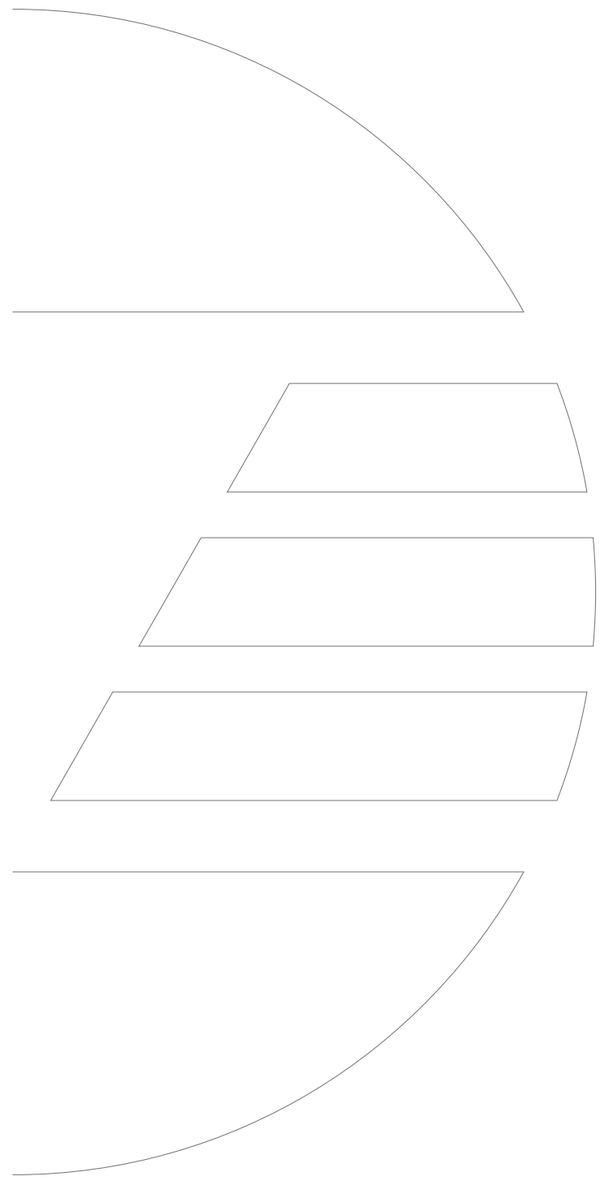

DC Fan Coil Units

CFW

007.0÷021.0

Water terminal unit
Indoor installation, wall-mounted, cased
Capacity from 2,7 to 4,87 kW

ELFOSpace WALL3

ELFOSpace WALL3 *is a range of cased water terminals that are cleverly designed to be placed in the space above doors or at mid-height on walls, and are particularly suitable, thanks to the accurate design, to residential and hotel installations.*
These units also feature:

- *available with standard DC Brushless motor;*
- *new design;*
- *standard version with infrared electronics;*
- *high efficiency and quiet operation;*
- *air flow direction control;*
- *the unit is supplied with 3-way valve built-in.*

functions and features

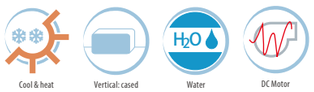

Stylish Panel

- Stylish front panel blends easily within any interior décor, ideal for use in shops, restaurants or offices with no or narrow false ceilings.

Convenient Installation

- Multi-directional outlet pipe feature: left\right\rear, to meet the needs of different rooms.

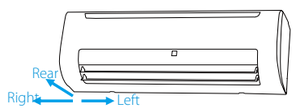

Built-in 3-Way Electromagnetic Valve

Auto Swing Louver

- The Auto Swing Louver function ensures that the air direction corresponds to the mode selected.

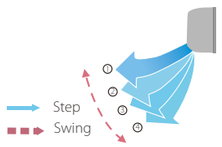

Easy Maintenance

- Removable front panel making maintenance convenient.

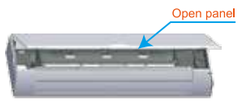

dimensions

(unit: mm)

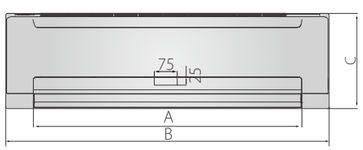

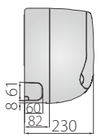

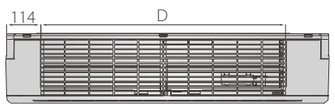

Size \ Model	CFW 007.0 CFW 009.0 CFW 011.0	CFW 017.0 CFW 021.0
A	732	892
B	915	1072
C	290	315
D	663	813

technical data

Model			CFW 007.0	CFW 009.0	CFW 011.0	CFW 017.0	CFW 021.0
Power supply		V/Ph/Hz	220-240/1/50				
Air flow (H/M/L)		m^3/h	492/454/400	585/485/413	825/689/590	862/741/634	979/849/717
		CFM	289/267/235	344/285/242	485/405/347	507/435/372	575/499/421
Cooling[1]	Capacity (H/M/L)	kW	2.7/2.59/2.39	2.91/2.54/2.19	3.81/3.3/2.88	4.47/3.98/3.48	4.87/4.26/3.79
	Water flow rate(H/M/L)	m^3/h	0.48/0.46/0.42	0.51/0.45/0.38	0.67/0.57/0.51	0.77/0.68/0.61	0.85/0.72/0.65
	Water pressure drop(H/M/L)	kPa	31.61/28.63/25.36	37.2/29.73/23.36	56.75/41.23/33.02	41.17/33.54/27.05	50.68/39.47/33.66
	Power input(H/M/L)	W	13/11/10	15/11/9	34/22/15	26/18/13	38/26/18
Heating[2]	Capacity (H/M/L)	kW	2.94/2.8/2.58	3.23/2.77/2.42	4.3/3.65/3.09	4.84/4.23/3.62	5.26/4.68/3.96
	Water flow rate(H/M/L)	m^3/h	0.51/0.49/0.46	0.56/0.49/0.42	0.73/0.64/0.56	0.84/0.73/0.64	0.89/0.80/0.68
	Water pressure drop(H/M/L)	kPa	32.66/34.89/30.24	34.12/31.53/25.1	51.86/47.53/35.69	36.82/33.83/26.26	47.12/42.75/32.95
	Power input(H/M/L)	W	11/11/9	14/10/8	31/20/14	22/16/12	33/23/16
Heating[3]	Capacity (H/M/L)	kW	3.29/3.03/2.63	3.76/3.22/2.77	5.08/4.33/3.77	5.68/4.94/4.24	6.31/5.57/4.77
	Water flow rate(H/M/L)	m^3/h	0.48/0.46/0.42	0.51/0.45/0.38	0.67/0.57/0.51	0.77/0.68/0.61	0.85/0.72/0.65
	Water pressure drop(H/M/L)	kPa	37.49/30.25/26.53	40.64/27.03/20.98	61.94/37.88/30.34	43.74/29.69/23.98	51.65/36.3/30.3
	Power input(H/M/L)	W	12/10/8	14/10/8	31/20/14	23/16/12	33/23/16
Sound pressure level (H/M/L)		dB(A)	32/30/27	32/27/23	45/39/35	38/34/30	44/40/35
Fan motor	Type		DC Motor	DC Motor	DC Motor	DC Motor	DC Motor
	Quantity		1	1	1	1	1
Fan	Type		Tangential fan	Tangential fan	Tangential fan	Tangential fan	Tangential fan
	Quantity		1	1	1	1	1
Coil	Row		2	2	2	2	2
	Max. working pressure	MPa	1.6	1.6	1.6	1.6	1.6
	Diameter	mm	Φ7	Φ7	Φ7	Φ7	Φ7
Net dimensions (W×H×D)		mm	915×290×230	915×290×230	915×290×230	1072×315×230	1072×315×230
Packing size (W×H×D)		mm	1020×390×315	1020×390×315	1020×390×315	1180×415×315	1180×415×315
Net weight		kg	12.7	12.7	12.7	15.1	14.9
Gross weight		kg	17.3	17.6	16.3	19	18.6
Water inlet/outlet pipe		inch	G3/4	G3/4	G3/4	G3/4	G3/4
Drain pipe		mm	ODΦ20	ODΦ20	ODΦ20	ODΦ20	ODΦ20

Notes:
H:High fan speed; M: Medium fan speed; L: Low fan speed.
1:Cooling mode (2 and 4-pipe coil): entering air temperature 27°C DB/19°C WB, entering/leaving water temperature 7°C /12°C.
2:Heating mode（1）: (2-pipe coil): entering air temperature 20°C DB, entering/leaving water temperature 45/40°C.
3:Heating mode（2）: (2-pipe coil): entering air temperature 20°C DB, enter water teperaure/water fiow 50°C/*(same water fiow as in standard rating condition in cooling)
4.Sound pressure level is tested in a semi-anechoic test room.

CFD MP

006.0÷031.0

Water terminal unit
Uncased horizontal and vertical indoor installation
Ductable
Capacity from 1,4 to 10,79 kW

ELFODuct

*The **ELFODuct MP** are the new generation air-treatment water terminal units ideal for installations where ducted air distribution is necessary. The units are designed for installation in suspended ceilings or lining walls and are characterized by their compactness and extremely low noise levels.*
The advantages of the new series are:

- *Version for 2 and 4-pipe systems;*
- *Version for horizontal installations in suspended ceilings and version;*
- *High energy efficiency thanks to the configuration with fan deck with DC Brushless motor;*
- *Available head up to **50 Pa**;*
- *Very low sound levels;*
- *Internal exchanger with large exchange surface, easily reversed water connections even on construction site;*
- *Complete accessories range for the full installation;*

functions and features

Various Selections

- Versions for 2/4 pipe systems.
- Versions for normal/large temperature difference systems.
- Large range of available static pressure.
- Wired controller is optional.
- Four fan speeds are avaliable: low, medium, high and one reserved for more choice.
- The stainless steel drain pan can be customized. 3-way valve is optional.

High Efficiency

- Highly efficient heat exchange for complete contranatant flow.

Standard Return Air Plenum and Filter

- Standard return air plenum and filter guarantees clean air supply and stable air flow rate.

Flexible Installation

- Left and right hand piping connections are optional, flexible installation.

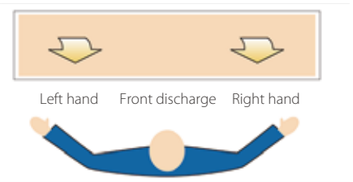

Fresh Air Intake

- Fresh air can enter through the duct unit so you can enjoy even fresher air in a room.

dimensions

(unit: mm)

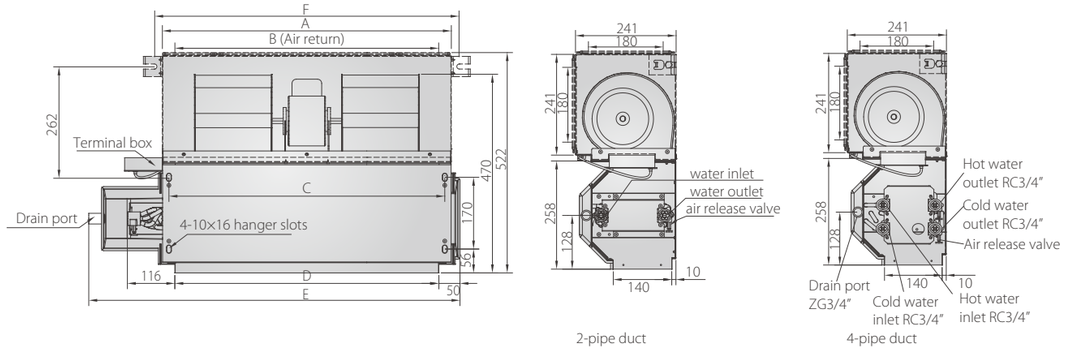

Size	A	B	C	D	E	F
CFD 006.0	545	485	513	485	741	583
CFD 007.0	645	585	613	585	841	683
CFD 011.0	745	685	713	685	941	783
CFD 015.0	745	685	713	685	941	783
CFD 021.0	965	905	933	905	1161	1003
CFD 025.0	1265	1205	1233	1205	1461	1303
CFD 028.0	1370	1310	1338	1310	1566	1408
CFD 031.0	1660	1600	1628	1600	1856	1698

Model			CFVD 006.0 CC2	CFD 007.0 CC2	CFD 011.0 CC2	CFD 015.0 CC2
Power supply		V/Ph/Hz	220-240/1/50			
Air flow (H/M/L)		m^3/h	411/273/171	531/442/311	734/564/389	865/626/441
		CFM	241/160/100	312/260/182	431/331/228	508/368/259
Standard external static pressure		Pa	12Pa (default); 30/50Pa can be set through dial switch on PCB			
Cooling[1]	Capacity (H/M/L)	kW	2.35/1.72/1.32	3.12/2.72/2.1	3.99/3.26/2.5	4.46/3.59/2.83
	Water flow rate(H/M/L)	m^3/h	0.43/0.31/0.25	0.6/0.48/0.37	0.69/0.57/0.43	0.79/0.63/0.50
	Water pressure drop(H/M/L)	kPa	13.6/8.6/6.3	23.8/16.4/11.3	13/9.3/5.8	16.4/11.3/7.6
	Power input(H/M/L)	W	17/9/7	23/15/10	26/15/9	39/19/11
Heating[2]	Capacity (H/M/L)	kW	2.68/1.99/1.42	3.82/3.08/2.28	4.7/3.85/2.77	5.27/4.21/3.21
	Water flow rate(H/M/L)	m^3/h	0.49/0.35/0.26	0.67/0.54/0.41	0.82/0.67/0.50	0.92/0.73/0.57
	Water pressure drop(H/M/L)	kPa	12.6/7.6/4.9	25/17.6/11.3	13/10.5/6.2	18.4/12.4/8.1
	Power input(H/M/L)	W	18/9/7	23/15/10	26/16/9	43/21/11
Heating[3]	Capacity (H/M/L)	kW	3.17/2.27/1.75	4.51/3.61/2.71	5.52/4.55/3.27	6.26/4.99/3.81
	Water flow rate(H/M/L)	m^3/h	0.43/0.31/0.25	0.60/0.48/0.37	0.69/0.57/0.43	0.79/0.63/0.50
	Water pressure drop(H/M/L)	kPa	10.3/6.1/4.2	19.2/12.9/8.5	10.8/7.7/4.8	13.7/9.5/6.3
	Power input(H/M/L)	W	18/9/7	23/15/10	28/16/9	43/21/11
Sound pressure level	0Pa (H/M/L)	dB(A)	38.1/28.4/23.4	36.4/29.5/20.7	38.4/32.2/24.0	44.3/36.3/27.9
Fan motor	Type		DC Motor	DC Motor	DC Motor	DC Motor
	Quantity		1	1	1	1
Fan	Type		Centrifugal, forward-curved Blades			
	Quantity		1	2	2	2
Coil	Row		3	3	3	3
	Max. working pressure	MPa	1.6	1.6	1.6	1.6
	Diameter	mm	Φ9.52	Φ9.52	Φ9.52	Φ9.52
Net dimensions (WxHxD)		mm	741×241×522	841×241×522	941×241×522	941×241×522
Packing size (WxHxD)		mm	790×260×555	890×260×560	990×260×560	990×260×560
Net weight		kg	16.7	19	21	21
Gross weight		kg	19.7	22	24	24
Water inlet/outlet pipe		inch	RC3/4	RC3/4	RC3/4	RC3/4
Drain pipe		inch	R3/4	R3/4	R3/4	R3/4

Model			CFD 021.0 CC2	CFD 025.0 CC2	CFD 028.0 CC2	CFD 031.0 CC2
Power supply		V/Ph/Hz	220-240/1/50			
Air flow (H/M/L)		m^3/h	1022/760/544	1452/1038/781	1824/1332/906	2134/1581/1083
		CFM	601/447/320	854/610/459	1072/783/532	1255/930/637
Standard external static pressure		Pa	12Pa (default); 30/50Pa can be set through dial switch on PCB			
Cooling[1]	Capacity (H/M/L)	kW	5.85/4.82/3.78	8.02/6.36/5.08	8.96/7.37/5.66	10.79/8.86/6.79
	Water flow rate(H/M/L)	m^3/h	1.05/0.85/0.65	1.42/1.11/0.89	1.59/1.29/0.98	1.93/1.57/1.20
	Water pressure drop(H/M/L)	kPa	31.4/22/14.2	31.6/20.5/13.9	24.1/16.9/10.8	26.3/18.8/12.8
	Power input(H/M/L)	W	49/24/12	60/28/16	96/43/19	106/49/24
Heating[2]	Capacity (H/M/L)	kW	6.62/5.38/4	9.15/7.08/5.58	10.74/8.55/6.35	12.62/10.15/7.47
	Water flow rate(H/M/L)	m^3/h	1.15/0.94/0.71	1.59/1.26/0.98	1.88/1.51/1.13	2.23/1.78/1.31
	Water pressure drop(H/M/L)	kPa	31.7/22.2/13.6	32.9/21.6/13.9	28.3/19.4/12	29.4/20/11.9
	Power input(H/M/L)	W	53/26/12	65/30/17	100/45/20	115/52/22
Heating[3]	Capacity (H/M/L)	kW	7.84/6.35/4.81	10.88/8.46/6.68	12.61/10.04/7.35	14.9/11.92/8.89
	Water flow rate(H/M/L)	m^3/h	1.05/0.85/0.65	1.42/1.11/0.89	1.59/1.29/0.98	1.93/1.57/1.20
	Water pressure drop(H/M/L)	kPa	26.4/18.2/11.4	26.3/16.9/11.5	21.1/14.8/9.5	22.6/16/10.2
	Power input(H/M/L)	W	52/25/13	65/30/17	99/44/19	114/51/22
Sound pressure level	0Pa (H/M/L)	dB(A)	46.1/39.0/30.3	44.9/36.1/27.7	47.8/40.7/30.7	48.9/41.8/31.7
Fan motor	Type		DC Motor	DC Motor	DC Motor	DC Motor
	Quantity		1	2	2	2
Fan	Type		Centrifugal, forward-curved Blades			
	Quantity		2	4	4	4
Coil	Row		3	3	3	3
	Max. working pressure	MPa	1.6	1.6	1.6	1.6
	Diameter	mm	Φ9.52	Φ9.52	Φ9.52	Φ9.52
Net dimensions (WxHxD)		mm	1161×241×522	1461×241×522	1566×241×522	1856×241×522
Packing size (WxHxD)		mm	1210×260×560	1510×260×560	1615×260×560	1905×260×560
Net weight		kg	23.7	33	34.7	39.2
Gross weight		kg	27.2	37.2	39.2	44.4
Water inlet/outlet pipe		inch	RC3/4	RC3/4	RC3/4	RC3/4
Drain pipe		inch	R3/4	R3/4	R3/4	R3/4

Notes:
H:High fan speed; M: Medium fan speed; L: Low fan speed.
1:Cooling mode (2 and 4-pipe coil): entering air temperature 27°C DB/19°C WB, entering/leaving water temperature 7°C /12°C.
2:Heating mode（1）: (2-pipe coil): entering air temperature 20°C DB, entering/leaving water temperature 45/40°C.
3:Heating mode（2）: (2-pipe coil): entering air temperature 20°C DB, enter water teperaure/water flow 50°C/*(same water flow as in standard rating condition in cooling)
4.Sound pressure level is tested in a semi-anechoic test room.

Model			CFD 006.0 CC4	CFD 007.0 CC4	CFD 011.0 CC4	CFD 015.0 CC4
Power supply		V/Ph/Hz	220-240/1/50			
Air flow (H/M/L)		m^3/h	320/210/140	450/340/280	530/390/260	690/470/370
		CFM	190/120/85	270/200/170	320/230/160	410/280/220
Standard external static pressure		Pa	12Pa (default); 30/50Pa can be set through dial switch on PCB.			
Cooling	Capacity (H/M/L)	kW	1.4/1.1/0.8	2.2/1.7/1.5	2.5/2.0/1.5	3.0/2.4/1.9
	Water flow rate	L/h	270	380	470	540
	Water pressure drop	kPa	10.2	10.5	11.3	13.6
Heating	Capacity (H/M/L)	kW	2.1/1.7/1.4	3.0/2.6/2.1	3.7/3.2/2.5	4.4/3.6/3.0
	Water pressure drop	kPa	8.9	9.1	10.1	11.7
Power input		W	14	19	24	36
Sound pressure level	12Pa (H/M/L)	dB(A)	35/25/23	36/29/23	38/32/24	43/35/27
	30Pa (H/M/L)	dB(A)	41/32/25	39/30/25	44/38/28	46/37/30
	50Pa (H/M/L)	dB(A)	43/34/26	44/36/26	47/41/28	48/42/33
Fan motor	Type		DC Motor	DC Motor	DC Motor	DC Motor
	Quantity		1	1	1	1
Fan	Type		Centrifugal, forward-curved Blades			
	Quantity		1	2	2	2
Coil	Row		3	3	3	3
	Max. Working pressure	MPa	1.6	1.6	1.6	1.6
	Diameter	mm	Φ9.52	Φ9.52	Φ9.52	Φ9.52
Net Dimensions (WxHxD)		mm	741×241×522	841×241×522	941×241×522	941×241×522
Packing size (WxHxD)		mm	790×260×560	890×260×560	990×260×560	990×260×560
Net weight		kg	17.2	19.5	21.5	21.5
Gross weight		kg	20.2	22.5	24.5	24.5
Water inlet/outlet pipe		inch	RC3/4	RC3/4	RC3/4	RC3/4
Drain pipe		inch	R3/4	R3/4	R3/4	R3/4

Model			CFD 021.0 CC4	CFD 025.0 CC4	CFD 028.0 CC4	CFD 031.0 CC4
Power supply		V/Ph/Hz	220-240/1/50			
Air flow (H/M/L)		m^3/h	900/670/440	1240/840/670	1610/1160/790	1850/1400/970
		CFM	530/400/260	730/500/400	950/690/470	1090/830/570
Standard external static pressure		Pa	12Pa (default); 30/50Pa can be set through dial switch on PCB.			
Cooling	Capacity (H/M/L)	kW	4.2/3.5/2.5	5.3/4.1/3.1	6.7/5.4/3.9	8.2/6.5/4.6
	Water flow rate	L/h	730	930	1180	1400
	Water pressure drop	kPa	15.3	12.8	21.6	34.9
Heating	Capacity (H/M/L)	kW	5.7/4.8/3.4	6.8/5.5/4.6	8.2/6.9/5.2	10.1/8.6/6.8
	Water pressure drop	kPa	12.7	12.0	15.5	25.73
Power input		W	45	57	87	95
Sound pressure level	12Pa (H/M/L)	dB(A)	46/39/30	46/38/30	48/41/31	47/40/30
	30Pa (H/M/L)	dB(A)	49/41/33	49/43/33	49/42/33	50/42/34
	50Pa (H/M/L)	dB(A)	51/44/39	52/45/37	51/44/35	53/45/37
Fan motor	Type		DC Motor	DC Motor	DC Motor	DC Motor
	Quantity		1	2	2	2
Fan	Type		Centrifugal, forward-curved Blades			
	Quantity		2	4	4	4
Coil	Row		3	3	3	3
	Max. Working pressure	MPa	1.6	1.6	1.6	1.6
	Diameter	mm	Φ9.52	Φ9.52	Φ9.52	Φ9.52
Net Dimensions (WxHxD)		mm	1161×241×522	1461×241×522	1566×241×522	1856×241×522
Packing size (WxHxD)		mm	1210×260×560	1510×260×560	1615×260×560	1905×260×560
Net weight		kg	24.2	33.5	35.2	39.7
Gross weight		kg	27.7	37.7	39.7	44.9
Water inlet/outlet pipe		inch	RC3/4	RC3/4	RC3/4	RC3/4
Drain pipe		inch	R3/4	R3/4	R3/4	R3/4

CFF

1÷12

Water terminal unit
Cased and uncased, vertical and horizontal indoor installation
Capacity from 1,5 to 8,25 kW

ELFOSpace

ELFOSpace OUT and IN *are the cased and uncased water terminal for installation in the commercial sector.*

- *Versions for 2 and 4-pipe systems;*
- *Available with DC Brushless ventilating unit;*
- *The available controls are simple and user-friendly, satisfying the most varied of requirements;*
- *Low noise operation and easy to clean;*
- *Twelve sizes available with an almost countless number of accessories for resolving any service application.*

functions and features

High Efficiency and Low Sound Operation

- Due to the DC brushless fan motor, the unit operates in high efficiency and low sound level.

Flexible Installation

- Cabinet and concealed versions meet various installation requirements.
- Horizontal or vertical installation.

Feature

- Auto mode and seven speed fan motor
- Ultra-thin, the thickness is only 200mm.
- Hysteresis temperature can be set in heating and cooling mode by PCB switch, field adjustable.
- With/without forced fan on can be set by PCB switch, field adjustable.
- The centralized control function can be connected through the customization XYE port.
- The Gateway(Modbus) can be connected through the customization PQE port.
- Wired controller KJR-75A is optional.
- 0-10V wired control is optional.

Notes: Centralized control function and Gateway(Modbus) can only choose one.

dimensions

(unit: mm)

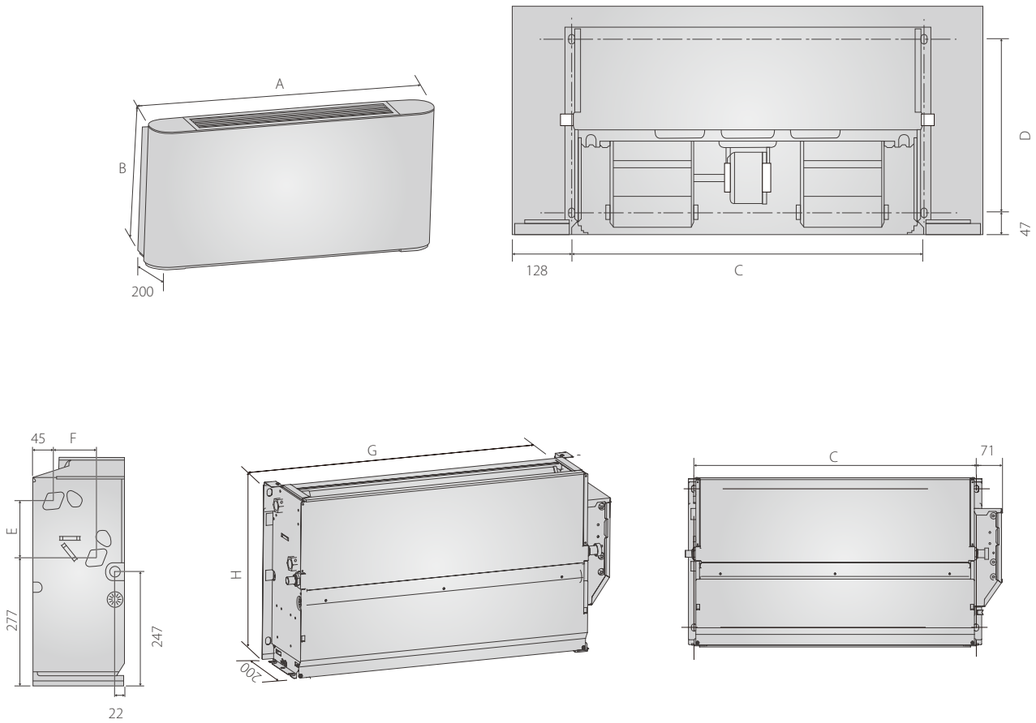

Model	150	250	300	500	700	800
A(mm)	790	1020	1240	1240	1360	1360
B(mm)	495	495	495	495	495	591
C(mm)	534	764	984	984	1104	1104
D(mm)	375	375	375	375	375	319
E(mm)	123	123	123	123	123	219
F(mm)	93	93	93	93	93	102
G(mm)	628	858	1078	1078	1198	1198
H(mm)	455	455	455	455	455	551

technical data

Model			CFFC 1	CFFC 2	CFFC 3	CFFC 4	CFFC 5	CFFC 6
Power supply		V/Ph/Hz	220-240/1/50					
Air flow (H/M/L)		m³/h	255/170/150	255/210/150	400/315/190	425/300/190	595/470/340	595/450/310
		CFM	150/100/88	150/124/88	235/185/112	250/176/112	350/276/200	350/265/182
External static pressure		Pa	0					
Cooling	Capacity (H/M/L)	kW	1.50/1.06/0.92	1.95/1.66/1.21	2.35/1.94/1.19	2.85/2.13/1.41	3.50/2.89/2.22	3.90/3.20/2.43
	Water flow rate(H/M/L)	m³/h	0.26/0.18/0.16	0.33/0.28/0.21	0.40/0.34/0.21	0.49/0.37/0.24	0.60/0.50/0.38	0.67/0.55/0.42
	Water pressure drop(H/M/L)	kPa	13.9/8.21/6.16	27.2/20.88/12.2	13.3/9.98/4.59	26/15.06/7.41	34.1/24.63/15.39	37.4/25.91/15.37
Heating	Capacity (H/M/L)	kW	1.57/1.07/0.92	2.05/1.75/1.25	2.60/2.11/1.34	2.95/2.15/1.42	3.80/3.10/2.35	4.00/3.22/2.50
	Water flow rate(H/M/L)	m³/h	0.27/0.19/0.16	0.35/0.30/0.22	0.45/0.37/0.23	0.51/0.37/0.24	0.65/0.53/0.40	0.70/0.56/0.43
	Water pressure drop(H/M/L)	kPa	15.1/7.63/5.84	25.3/19.65/10.25	14.3/10.33/4.5	24.4/13.65/6.64	35.1/24.41/14.82	36.5/25.34/14.22
Power input (H/M/L)		W	15/9/8	20/14/9	17/12/7	20/11/8	26/17/10	29/17/11
Sound power level	(H/M/L)	dB(A)	47/36/34	52/46/38	43/37/29	46/37/29	52/44/36	52/45/36
Fan motor	Type		Low noise DC fan motor					
	Quantity		1	1	1	1	1	1
Fan	Type		Centrifugal, forward-curved Blades					
	Quantity		1	1	2	2	2	2
Coil	Row		3	4	3	4	3	4
	Max. working pressure	MPa	1.6	1.6	1.6	1.6	1.6	1.6
	Diameter	mm	Φ7.94	Φ7.94	Φ7.94	Φ7.94	Φ7.94	Φ7.94
Body	Net dimensions (WxHxD)	mm	495×200×790	495×200×790	495×200×1020	495×200×1020	495×200×1240	495×200×1240
	Packing size (WxHxD)	mm	595×300×895	595×300×895	595×300×1125	595×300×1125	595×300×1345	595×300×1345
	Net weight	kg	18.0	18.5	21.5	22.0	25.5	26.5
	Gross weight	kg	23.5	24.0	27.5	28.0	32.5	33.5
Water inlet/outlet pipe		inch	G3/4	G3/4	G3/4	G3/4	G3/4	G3/4
Drain pipe		mm	ODΦ18.5	ODΦ18.5	ODΦ18.5	ODΦ18.5	ODΦ18.5	ODΦ18.5

Model			CFFC 7	CFFC 8	CFFC 9	CFFC 10	CFFC 11	CFFC 12
Power supply		V/Ph/Hz	220-240/1/50					
Air flow (H/M/L)		m³/h	790/580/410	800/600/420	1190/855/505	1190/875/530	1360/1015/685	1300/980/680
		CFM	488/359/253	471/353/247	700/503/297	700/515/312	800/597/403	765/576/400
External static pressure		Pa	0					
Cooling	Capacity (H/M/L)	kW	4.30/3.48/2.71	4.85/3.92/2.93	5.60/4.47/3.14	6.35/5.19/3.62	7.35/6.12/4.57	8.25/6.65/4.84
	Water flow rate(H/M/L)	m³/h	0.74/0.60/0.47	0.83/0.67/0.51	0.96/0.77/0.54	1.09/0.90/0.63	1.27/1.05/0.79	1.43/1.14/0.83
	Water pressure drop(H/M/L)	kPa	54.2/36.22/22.78	54.3/36.81/21.77	50.7/33.38/17.73	32.8/21.75/11.43	44.1/33.7/19.41	71.4/46.17/25.39
Heating	Capacity (H/M/L)	kW	4.70/3.70/2.81	5.25/4.09/3.04	6.00/4.77/3.36	7.05/5.61/3.83	8.05/6.46/4.71	8.70/6.81/4.85
	Water flow rate(H/M/L)	m³/h	0.81/0.64/0.48	0.91/0.71/0.53	1.04/0.83/0.59	1.22/0.98/0.67	1.39/1.12/0.82	1.51/1.18/0.83
	Water pressure drop(H/M/L)	kPa	54.3/36.87/22.32	53.4/36.54/20.47	55.5/37.66/19.27	37.6/25.47/12.5	46.9/31.9/18.16	62.6/41.06/21.68
Power input (H/M/L)		W	50/25/14	52/28/15	96/44/17	92/46/19	113/53/22	102/49/22
Sound power level	(H/M/L)	dB(A)	59/51/43	59/51/43	64/56/45	62/56/46	63/58/49	63/57/47
Fan motor	Type		Low noise DC fan motor					
	Quantity		1	1	1	1	1	1
Fan	Type			Centrifugal, forward-curved Blades				
	Quantity		2	2	3	3	3	3
Coil	Row		3	4	3	4	3	4
	Max. working pressure	MPa	1.6	1.6	1.6	1.6	1.6	1.6
	Diameter	mm	Φ7.94	Φ7.94	Φ7.94	Φ7.94	Φ7.94	Φ7.94
Body	Net dimensions (WxHxD)	mm	495×200×1240	495×200×1240	495×200×1360	495×200×1360	591×200×1360	591×200×1360
	Packing size (WxHxD)	mm	595×300×1345	595×300×1345	595×300×1465	595×300×1465	695×300×1465	695×300×1465
	Net weight	kg	25.5	26.5	28.5	29.5	32.5	34.5
	Gross weight	kg	32.5	33.5	36.0	37.0	41.0	42.5
Water inlet/outlet pipe		inch	G3/4	G3/4	G3/4	G3/4	G3/4	G3/4
Drain pipe		mm	ODΦ18.5	ODΦ18.5	ODΦ18.5	ODΦ18.5	ODΦ18.5	ODΦ18.5

Notes:
1. H: High fan speed; M: Medium fan speed; L: Low fan speed.
2. Cooling conditions: Entering water 7℃, leaving water 12℃, Entering air temperature 27℃ DB/19℃ WB.
   Heating conditions: Entering water 45℃, leaving water 40℃, Entering air temperature 20℃ DB/15℃ WB.
3. Noise is tested in a reverberation chamber.

technical data

Model			CFFU 1	CFFU 2	CFFU 3	CFFU 4	CFFU 5	CFFU 6
Power supply		V/Ph/Hz	220-240/1/50					
Air flow (H/M/L)		m³/h	255/170/150	255/210/150	400/315/190	425/300/190	595/470/340	595/450/310
		CFM	150/100/88	150/124/88	235/185/112	250/176/112	350/276/200	350/265/182
External static pressure		Pa	12					
Cooling	Capacity (H/M/L)	kW	1.50/1.06/0.92	1.95/1.66/1.21	2.35/1.94/1.19	2.85/2.13/1.41	3.50/2.89/2.22	3.90/3.20/2.43
	Water flow rate(H/M/L)	m³/h	0.26/0.18/0.16	0.33/0.28/0.21	0.40/0.34/0.21	0.49/0.37/0.24	0.60/0.50/0.38	0.67/0.55/0.42
	Water pressure drop(H/M/L)	kPa	13.9/8.21/6.16	27.2/20.88/12.2	13.3/9.98/4.59	26/15.06/7.41	34.1/24.63/15.39	37.4/25.91/15.37
Heating	Capacity (H/M/L)	kW	1.57/1.07/0.92	2.05/1.75/1.25	2.60/2.11/1.34	2.95/2.15/1.42	3.80/3.10/2.35	4.00/3.22/2.50
	Water flow rate(H/M/L)	m³/h	0.27/0.19/0.16	0.35/0.30/0.22	0.45/0.37/0.23	0.51/0.37/0.24	0.65/0.53/0.40	0.70/0.56/0.43
	Water pressure drop(H/M/L)	kPa	15.1/7.63/5.84	25.3/19.65/10.25	14.3/10.33/4.5	24.4/13.65/6.64	35.1/24.41/14.82	36.5/25.34/14.22
Power input (H/M/L)		W	15/9/8	20/14/9	17/12/7	20/11/8	26/17/10	29/17/11
Sound power level	(H/M/L)	dB(A)	47/36/34	52/46/38	43/37/29	46/37/29	52/44/36	52/45/36
Fan motor	Type		Low noise DC fan motor					
	Quantity		1	1	1	1	1	1
Fan	Type		Centrifugal, forward-curved Blades					
	Quantity		1	1	2	2	2	2
Coil	Row		3	4	3	4	3	4
	Max. working pressure	MPa	1.6	1.6	1.6	1.6	1.6	1.6
	Diameter	mm	Φ7.94	Φ7.94	Φ7.94	Φ7.94	Φ7.94	Φ7.94
Body	Net dimensions (WxHxD)	mm	455×200×637	455×200×637	455×200×867	455×200×867	455×200×1087	455×200×1087
	Packing size (WxHxD)	mm	555×255×755	555×255×755	555×255×985	555×255×985	555×255×1205	555×255×1205
	Net weight	kg	11.8	12.1	13.9	14.8	17.3	18.2
	Gross weight	kg	16.1	16.4	19.4	20.3	24.0	24.9
Water inlet/outlet pipe		inch	G3/4	G3/4	G3/4	G3/4	G3/4	G3/4
Drain pipe		mm	ODΦ18.5	ODΦ18.5	ODΦ18.5	ODΦ18.5	ODΦ18.5	ODΦ18.5

Model			CFFU 7	CFFU 8	CFFU 9	CFFU 10	CFFU 11	CFFU 12
Power supply		V/Ph/Hz	220-240/1/50					
Air flow (H/M/L)		m³/h	790/580/410	800/600/420	1190/855/505	1190/875/530	1360/1015/685	1300/980/680
		CFM	488/359/253	471/353/247	700/503/297	700/515/312	800/597/403	765/576/400
External static pressure		Pa	12					
Cooling	Capacity (H/M/L)	kW	4.30/3.48/2.71	4.85/3.92/2.93	5.60/4.47/3.14	6.35/5.19/3.62	7.35/6.12/4.57	8.25/6.65/4.84
	Water flow rate(H/M/L)	m³/h	0.74/0.60/0.47	0.83/0.67/0.51	0.96/0.77/0.54	1.09/0.90/0.63	1.27/1.05/0.79	1.43/1.14/0.83
	Water pressure drop(H/M/L)	kPa	54.2/36.22/22.78	54.3/36.81/21.77	50.7/33.38/17.73	32.8/21.75/11.43	44.1/33.7/19.41	71.4/46.17/25.39
Heating	Capacity (H/M/L)	kW	4.70/3.70/2.81	5.25/4.09/3.04	6.00/4.77/3.36	7.05/5.61/3.83	8.05/6.46/4.71	8.70/6.81/4.85
	Water flow rate(H/M/L)	m³/h	0.81/0.64/0.48	0.91/0.71/0.53	1.04/0.83/0.59	1.22/0.98/0.67	1.39/1.12/0.82	1.51/1.18/0.83
	Water pressure drop(H/M/L)	kPa	54.3/36.87/22.32	53.4/36.54/20.47	55.5/37.66/19.27	37.6/25.47/12.5	46.9/31.9/18.16	62.6/41.06/21.68
Power input (H/M/L)		W	50/25/14	52/28/15	96/44/17	92/46/19	113/53/22	102/49/22
Sound power level	(H/M/L)	dB(A)	59/51/43	59/51/43	64/56/45	62/56/46	63/58/49	63/57/47
Fan motor	Type		Low noise DC fan motor					
	Quantity		1	1	1	1	1	1
Fan	Type		Centrifugal, forward-curved Blades					
	Quantity		2	2	3	3	3	3
Coil	Row		3	4	3	4	3	4
	Max. working pressure	MPa	1.6	1.6	1.6	1.6	1.6	1.6
	Diameter	mm	Φ7.94	Φ7.94	Φ7.94	Φ7.94	Φ7.94	Φ7.94
Body	Net dimensions (WxHxD)	mm	455×200×1087	455×200×1087	455×200×1207	455×200×1207	550×200×1207	550×200×1207
	Packing size (WxHxD)	mm	555×255×1205	555×255×1205	555×255×1325	555×255×1325	650×255×1325	650×255×1325
	Net weight	kg	17.3	18.2	19.6	20.8	23.1	24.3
	Gross weight	kg	24.0	24.9	26.4	27.6	30.2	31.4
Water inlet/outlet pipe		inch	G3/4	G3/4	G3/4	G3/4	G3/4	G3/4
Drain pipe		mm	ODΦ18.5	ODΦ18.5	ODΦ18.5	ODΦ18.5	ODΦ18.5	ODΦ18.5

Notes:
1. H: High fan speed; M: Medium fan speed; L: Low fan speed.
2. Cooling conditions: Entering water 7℃, leaving water 12℃, Entering air temperature 27℃ DB/19℃ WB.
   Heating conditions: Entering water 45℃, leaving water 40℃, Entering air temperature 20℃ DB/15℃ WB.
3. Noise is tested in a reverberation chamber.
4. Test with concealed tooling.

Control Devices

Wireless Remote Controllers

Model	Appearance	Function Descriptions	Applicable FCUs
R05/BGE		● LCD display screen ● Mode control ● Fan speeds control ● Time setting / Temp. setting / Swing setting	4-way Cassette (standard)
R51/E			Compact 4-way cassette (standard) Wall-mounted (standard)

Wired Controllers

Model	Appearance	Function Descriptions	Applicable FCUs
KJRP-86A1-E		● LCD display screen ● Mode control ● Fan speeds control ● Timer setting / Temp. setting	AC 2nd Ceiling& Floor and Duct without electric heater (optional)
KJR-18B/E		● Mechanical thermostat ● Mode control ● Fan speeds control ● Temp. setting	AC 2nd Ceiling& Floor and Duct without electric heater (optional)
KJR-29B		● Receiving remote signal ● Mode control ● Fan speeds control ● Temp. setting	Cassette / Wall-mounted (optional)
KJR-75A/BK		● LED display screen ● Mode control ● Seven speed fan control ● Temp. setting	DC 2nd generation Ceiling&Floor(optional)
KJRP-86I/MFK-E		● LCD display screen ● Mode control ● Fan speeds control ● Timer / Temp. setting ● ECO setting/reminder	AC Ceiling& Floor and AC&DC Duct without electric heater (optional)
KJRP-86A/BMFNvKD-E		● LCD display screen ● Mode/Electric heater control ● Fan speeds control ● Timer / Temp. setting ● ECO setting/reminder ● Compatible with Modbus	AC Ceiling& Floor and AC&DC Duct (optional)

Centralized Controllers

Model	Appearance	Function Descriptions	Applicable FCUs
CCM09		● Weekly schedule function ● Large LCD display screen ● Max. of 64 FCUs can be controlled by a CCM09 ● Mode control / fan speed control ● Time setting / temp. setting / swing setting	All FCUs (non-PCB FCUs need adding PC board control kit)
CCM30		● Touch-style keys ● Large LCD display screen ● Max. of 64 FCUs can be controlled by a CCM30 ● Mode control / fan speed control ● Time setting / temp. setting / swing setting	

Accessories

PC Board Control Kit for FCU

- Available for all non-PCB FCUs.
- Flexibility installation: can be attached to the unit, mounted on a wall or hung under a ceiling.
- External installation making maintenance more convenient.
- Functions: three fan speeds control, Water pump control, Long-distance ON/OFF control, ALARM function, electric heater control.
- Operating status can be displayed by wired controller lamp indicator.
- Centralized control function.
- BMS control function through Modbus protocol.

Centralized control

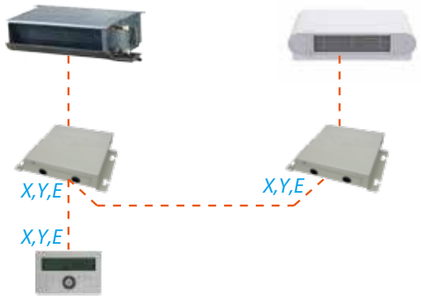

Centralized controller

Note: The ceiling&floor of AC and duct series of AC and DC need PCB kit to connect Centralized controller.

Model			CE-FCUKZ-03	CE-FCUKZ-04
Applicable appliance			2-pipe FCUs	4-pipe FCUs
Power supply		V-Ph-Hz	220~240-1-50/60	
Operation range	Room temp.	℃	17-30	
	Inlet water temp.	℃	3-75	
Temp. controlling precision		℃	±1	
Net dimension	W×H×D	mm	296×66×212	
Packing size	W×H×D	mm	410×115×262	
Net weight		kg	1.4	
Gross weight		kg	2.5	

Valve kit

DN(mm)	Inner Screw Thead	Applicable Appliance
15	1/2"	For 4-pipe cassette and ceiling&floor (for cold water),
20	3/4"	For 2-pipe FCU,4-pipe duct, 4-pipe cassette and ceiling&floor (for cold water).

Note:
The valve kit includes valve, actuator and connecting pipe. For different model of units, the models of valve kit are difference.

DC Fan Coil Units

Application of Central Control & BMS Control

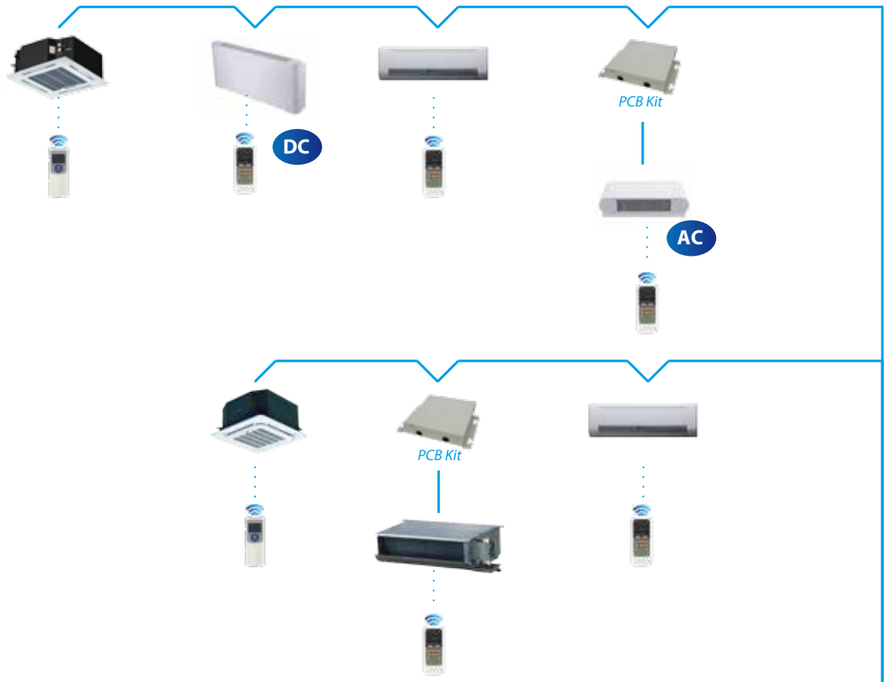

Notice:Please note that the PCB kit and Wired Controller(KJR-18B / KJRP-86A) can not be connected with an Indoor Unit at the same time

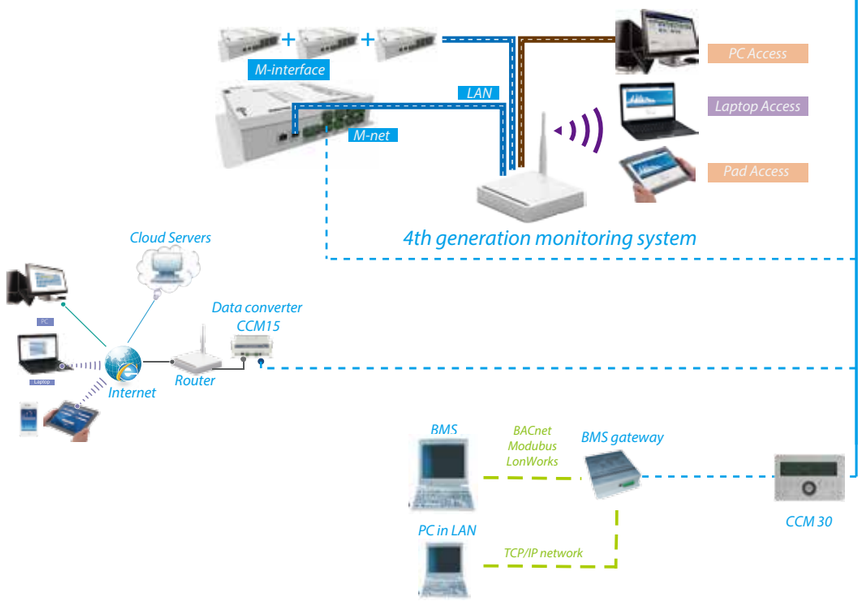

Note：When connecting to BMS through the BACnet protocol, a custom version of CCM30 was required.

Selection Software

Features

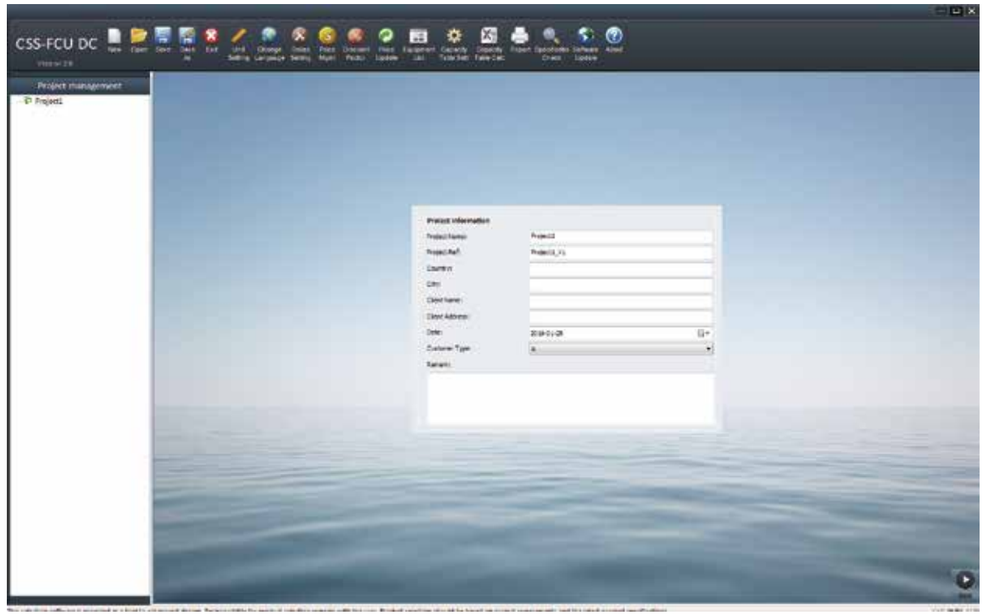

- Select by entering air and water conditions as well as fan speed.
- Easy to operate interface and visual display.
- Powerful project management function.

Main Interface

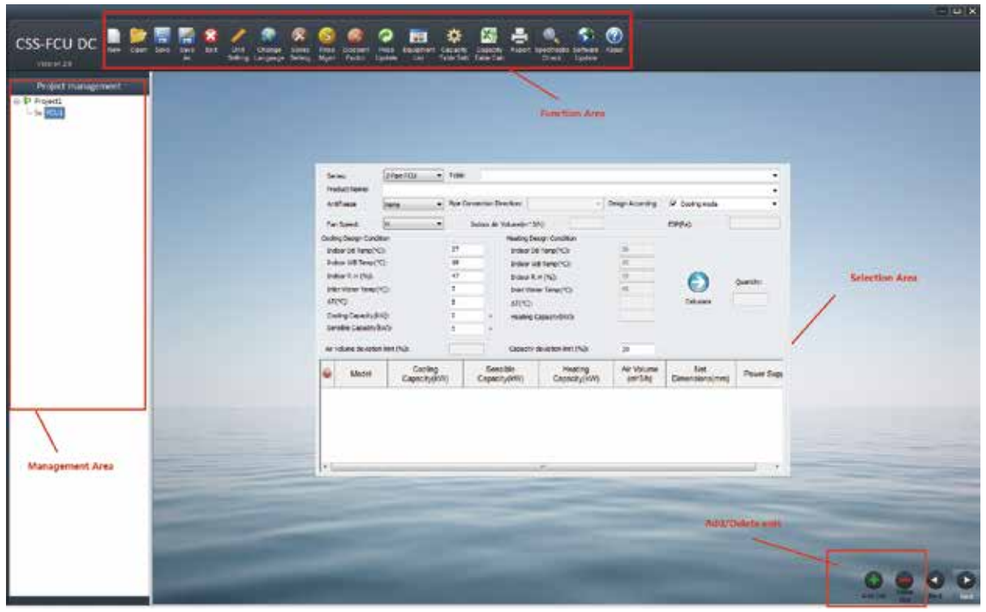

Selection Interface

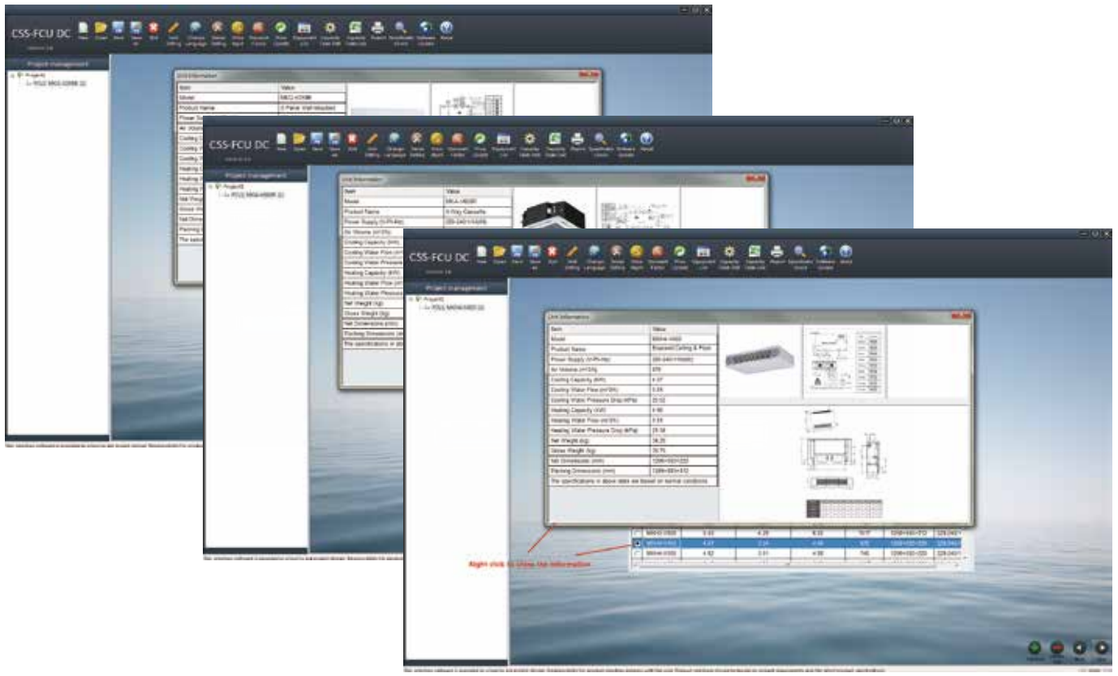

Report Data Interface

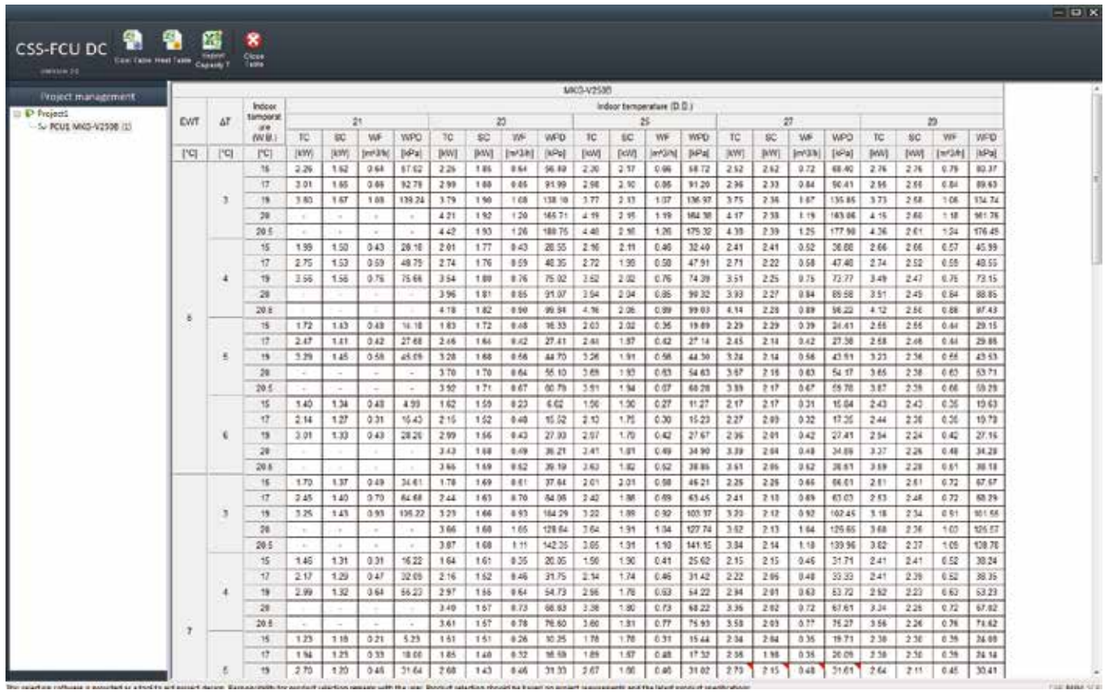

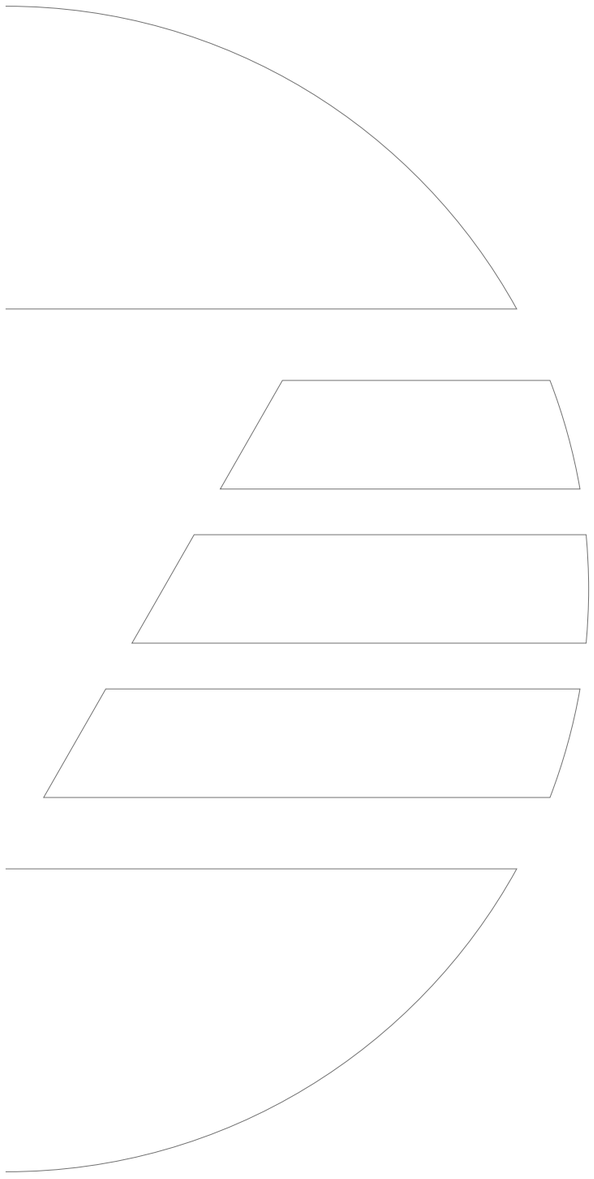

Control Solutions